JNSZ250DN

Parts Manual

READ THIS MANUAL CAREFULLY

IT CONTAINS IMPORTANT SAFETY INFORMATION.

MINIMUM
RECOMMENDED
OPERATOR AGE: **16**

FOR OFF-ROAD USE ONLY

This vehicle is designed and manufactured for off-road use only.

USA only:

It does not confirm to federal motor vehicle safety standards and operation on Public streets, roads, or highways is illegal

CONTENTS

Warranty policy **3**
OWNER'S MANUAL **13**
FOREWORD 13
A FEW WORDS ABOUT SAFETY 13
IMPORTANT SAFETY INFORMATION 14
SAFETY LABELS 15
ARE YOU READY TO DRIVE? 17
IS YOUR VEHICLE READY TO DRIVE? 19
SAFE DRIVING PRECAUTIONS 20
SPECIFICATIONS 22
OPERATION 24
SERVICE INSTRUCTION 30
REPAIR 34
WIRING DIAGRAMColor code table 36
PARTS MANUAL **37**
1、CRANKCASE ASSY. 37
2、SIDE COVER ASSY.L 39
3、RIGHT COVER ASSY 40
4、CYLINGDER HEAD CASEING ASSY 42
5、CYLINGDER HEAD ASSY 44
6、CYLINGER BODY ASSY 46
7、TIMING CHAIN 47
8、MAGNETOR ASSY 48
9、ADMISSION MACHANISM 49
10、CRANK LINK LEVER & PISTON 50
11、SPEED CHANGER. 51
12、CLUTCH ASSY 52
13、GEARBOX COVER ASSY 53
14、TRANSMISSION GEAR ASSY 54
15、GEAR SHIFT MACHANISM 56
16、ENGINE OIL PUMP ASSY 57
17、COOLANT PUMP ASSY 58
18、ELECTRIC STARTER ASSY 59
19、CARBURETOR ASSY 60
20、FRAME & FUEL TANK&REDIATOR 61
21、FRONT SUSPENSION 63
22、STEERING&THROTTLE&BRAKE&SHIFT 67
23、ENGINE RACK&TRANSMISSION 71
24、ENGINE ASSEMBLY 73
25、EXHAUST&SHIFT&BRAKE 75
26、REAR SUSPENSION 79
27、ELECTRICAL PARTS 81
28、OTHER PARTS 83

PREPARATION ATTACH INSTRUCTION 86
BATTERY INSTALLATAION 86
INSTALLATION PROTECTIVE BARS 87
REAR SHOCK ISTALLATION 89
TRAILING ARM INSTALLATION 89
FRONT SHOCK INSTALLATION 90
FRONT TIRE INSTALLATION 91
SEAT AND SAFETY BELT INSTALLATION 92
RADIATOR INSTALLATION 92
EXHAUST INSTALLATION 93
DEALER PRE-DELIVERY INSPECTION 94

PARTS MANUAL

1、CRANKCASE ASSY.

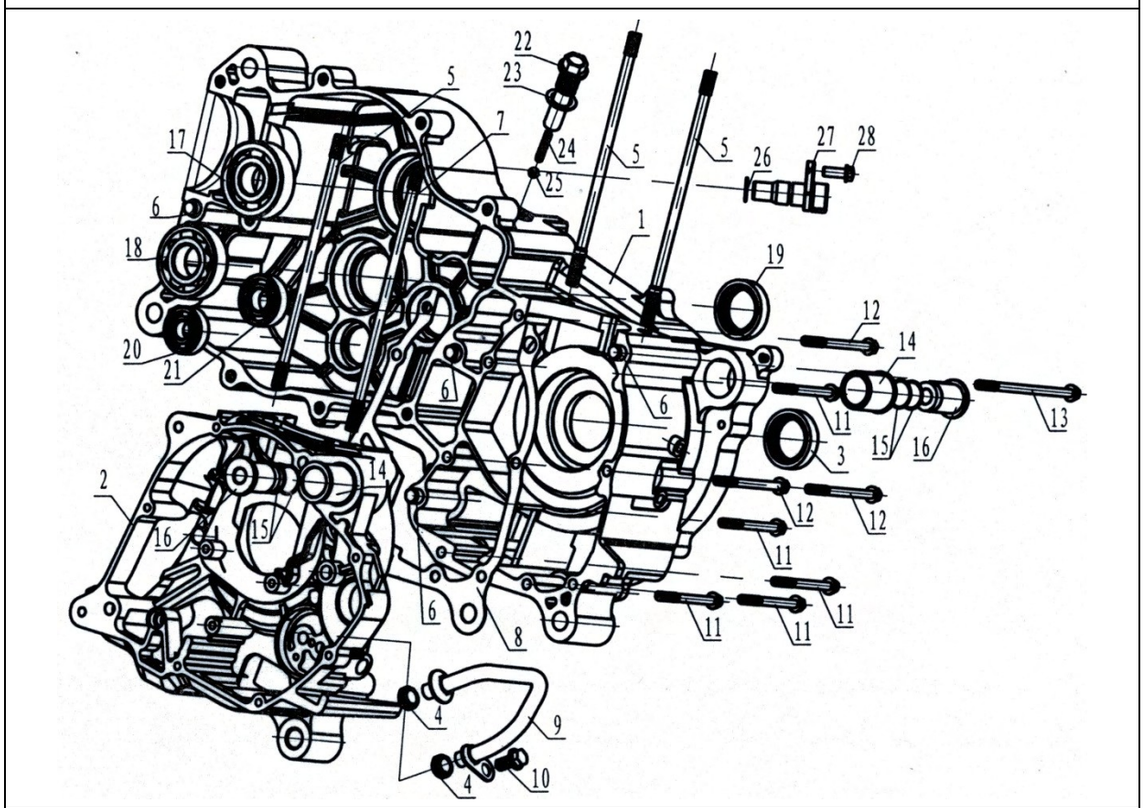

No.	P/N	ENGLISH	Qty
1	172MM-C-011100	LEFT CRANK CASE ASSY	1
2	172MM-C-011200	RIGHT CRANK CASE ASSY	1
3	172MM-011001	SEAL 28X40X8	1
4	172MM-011002	INNER OIL PIPE SEAL RING	2
5	172MM-011004	CYLINGDER STUD A	3
6	152MI-021005	LOCATING PIN Φ10x14	4
7	172MM-011005	CYLINGDER STUD B	1
8	172MM-B-011006	CRANK CASE SEAL WASHER	1
9	172MM-011400	INNER OIL PIPE	1
10	152MI-021019	BOLT M6X12	1
11	152MI-011017	BOLT M6X60	5
12	1P52MI-011018	BOLT M6X70	3
13	1P52MI-A-011006	BOLT M6X105	1
14	152MI-011010	OUTER SLEEVE.EAR	2
15	152MI-011008	"O" RING FOR SEAL	4
16	152MI-011009	INNER SLEEVE.EAR	2
17	276-B6304	BEARING 6304	1

1、CRANKCASE ASSY.

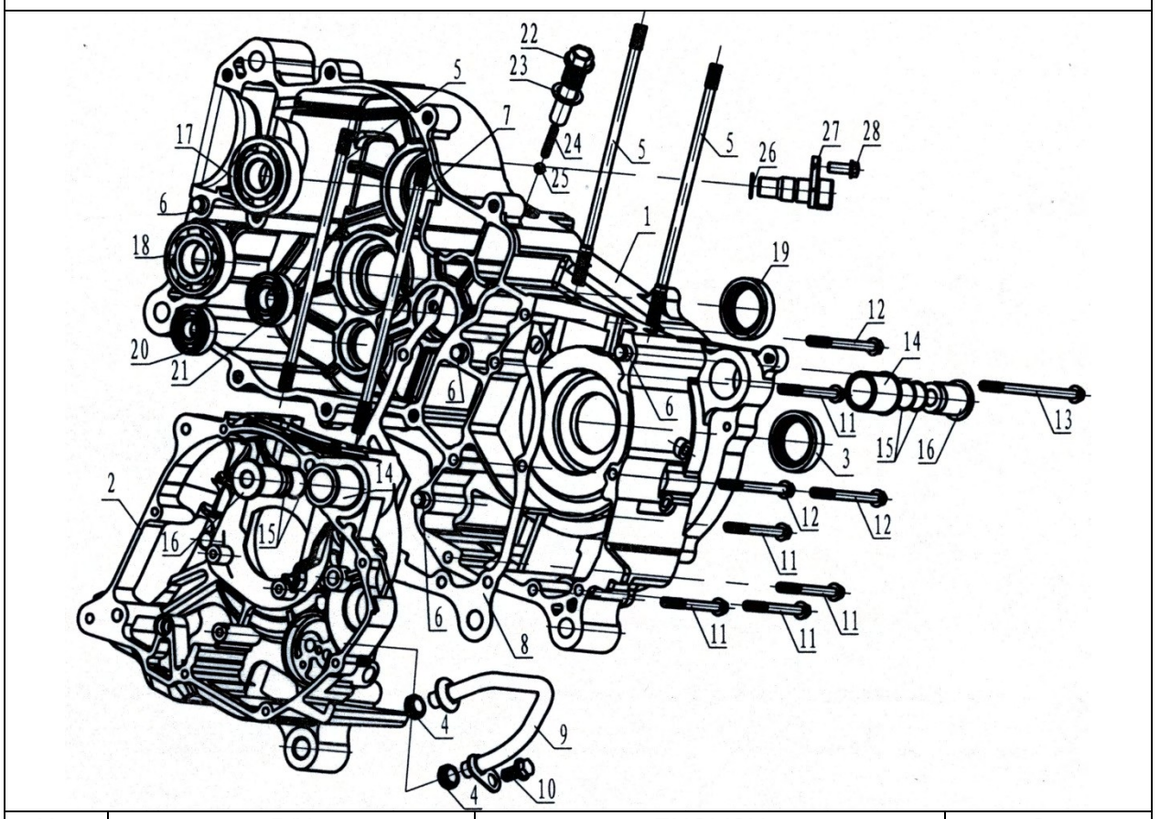

No.	P/N	ENGLISH	Qty
18	172MM-060002	BALL BEARING 22X50X14	1
19	9877- FB33X35X5	OIL SEAL FB 33X35X5	1
20	276-B6201	BEARING 6201	1
21	276- 6202-RS	BEARING 6202-RS	1
22	172MM-B-068001	HOLLOW BOLT M14X1.5	1
23	CF188-068002	WASHER 14.4X22X1	1
24	CF188-068003	SPACER SPRING	1
25	308-3/8	STEEL BALL	1
26	152MI-130004	"O" RING FOR SEAL13.5X1.4	1
	172MM-B-011300	ODOMETER SENSOR	1
27	172MM-B-011400	SEAL CAP	1
28	152MI-023010	BOLT M6X20	1

2、SIDE COVER ASSY.L

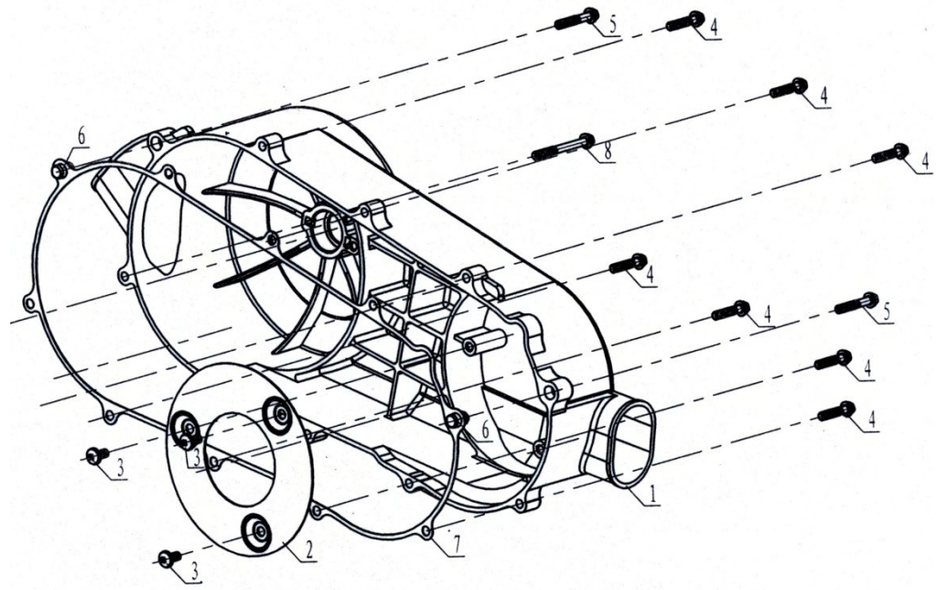

No.	P/N	ENGLISH	Qty
1	172MM-B-012001	LEFT SIDE COVER	1
2	172MM-B-012002	AIR DAMPER	1
3	818-M6X12	SCREW	3
4	172MM-B-012005	BOLT	7
5	152MI-013008	BOLT	2
6	152MI-021005	LOCATING PIN Φ10x14	2
7	172MM-B-012003	LEFT SIDE COVER SEAL WASHER	1
8	152MI-021018	BOLT	1

3、RIGHT COVER ASSY

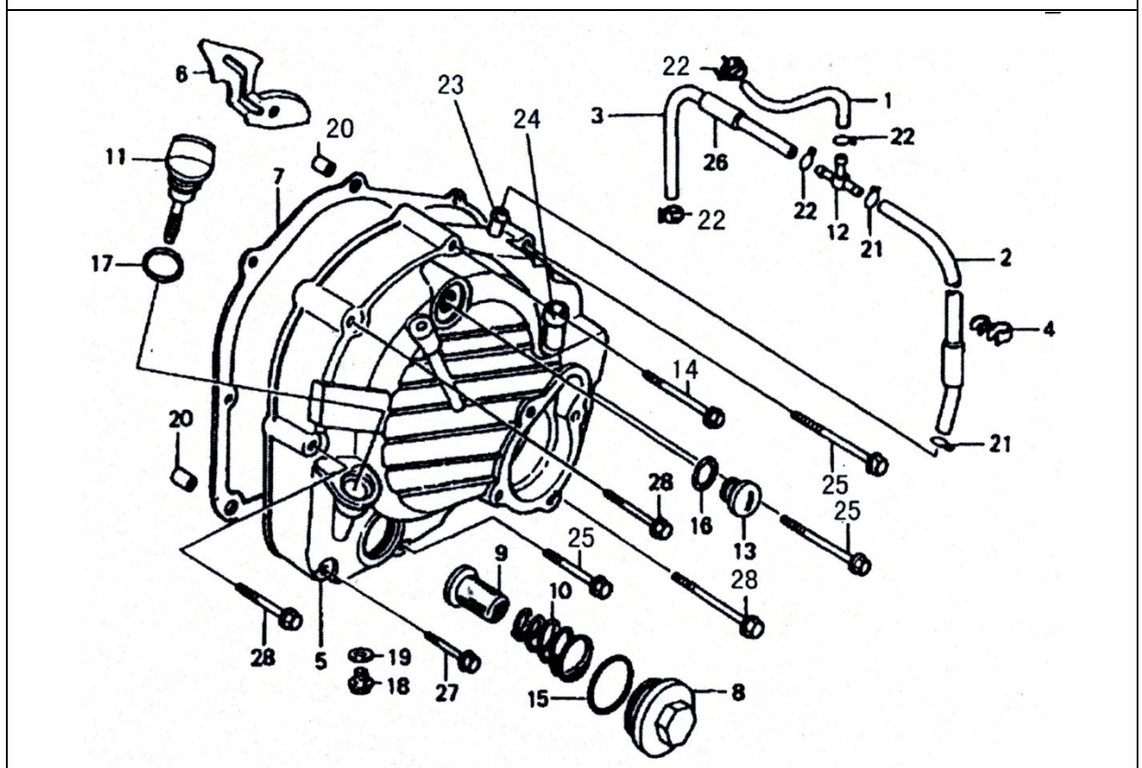

No.	P/N	ENGLISH	Qty
1	172MM-013013	CYLINDER HEAD COVER AIR PIPE	1
2	172MM-013100	RIGHT SIDE COVER BREATH PIPE	1
3	172MM-013015	AIR FILTER BREATH PIPE	1
4	172MM-013016	BREATH PIPE CLAMP	1
5	172MM-013002	RIGHT SIDE COVER	1
6	172MM-013008	CABLE PRESS PLATE	1
7	172MM-013012	RIGHT SIDE COVER SEAL WASHER	1
8	172MM-013007	OIL FILTER CAP	1
9	152MI-013100	OIL FILTER CORE	1
10	172MM-013006	SPRING	1
11	172MM-013001	ENGINE OIL METER	1
12	172MM-013019	3-WAY	1
13	152MI-021008	UPPER OBSERVATION HOLE CAP	1
14	172MM-013031	BOLT	1
15	172MM-013028	"O" RING 30X3.35	1
16	152MI-021009	SEAL RING.CAP	1
17	172MM-013030	"O" RING 18X3.35	1
18	172MM-013005	OUTLET BOLT	1
19	152MI-021014	WASHER 12	1

3、RIGHT COVER ASSY

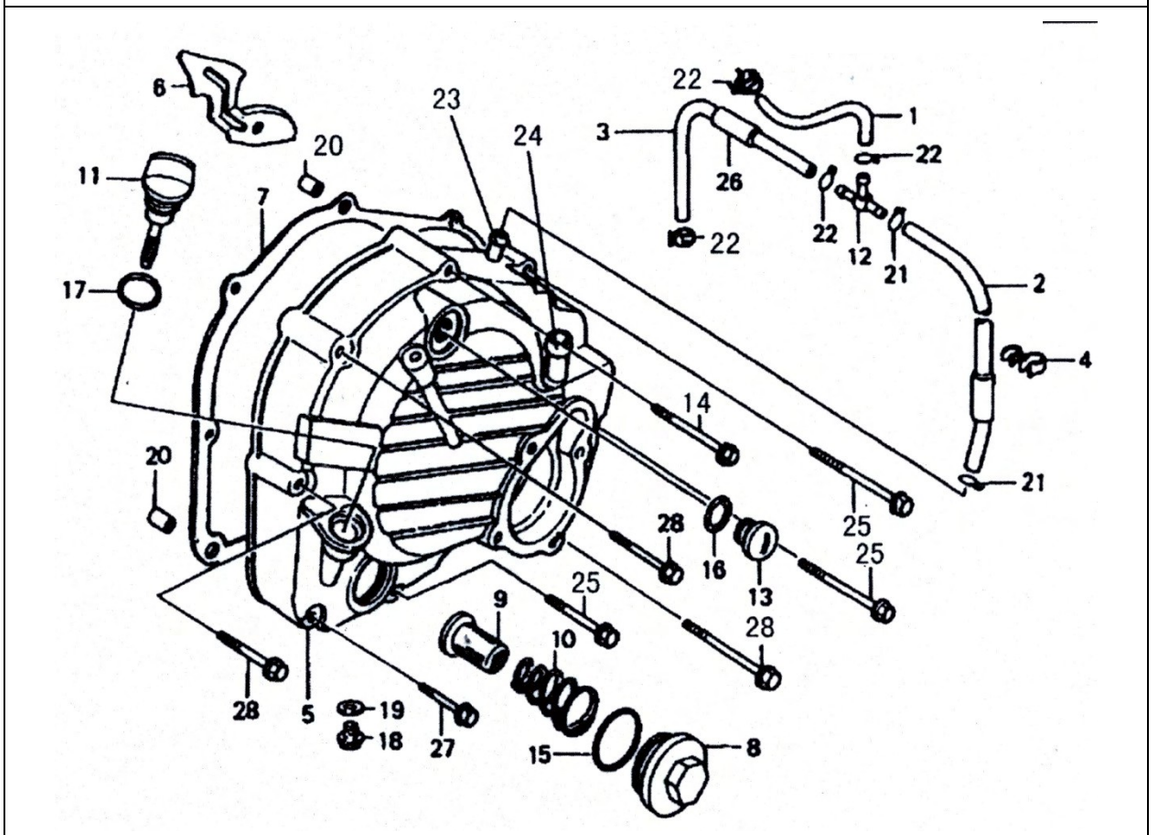

No.	P/N	ENGLISH	Qty
20	152MI-08008	LOCATING PIN Φ8x14	2
21	QC/T621-1999-A10	CLAMP 12	2
22	QC/T621-1999-A12	CLAMP 10	4
23	172MM-013010	BREATH FAUCET	1
24	172MM-013009	WATER OUTLET FAUCET	1
25	152MI-013009	BOLT M6X40	3
26	172MM-013026	PROTECTION PIPE	1
27	152MI-071007	BOLT M6X28	1
28	1P52MI-011018	BOLT M6X70	3

4、CYLINGDER HEAD CASEING ASSY

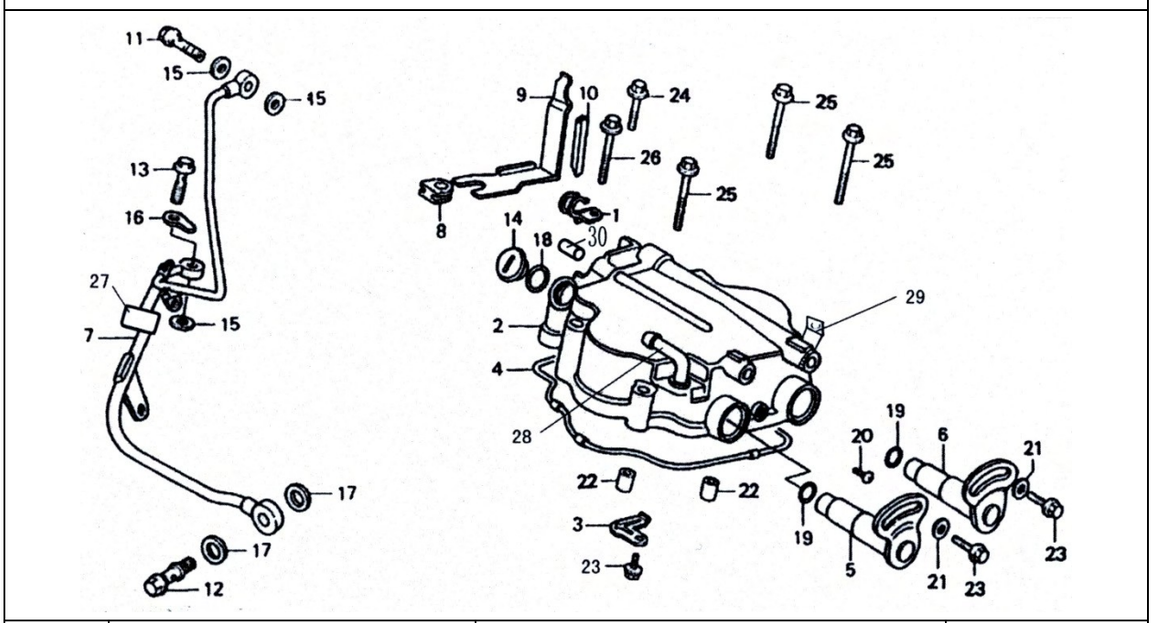

No.	P/N	ENGLISH	Qty
1	172MM-021009	OIL PIPE CLAMP	1
2	172MM-021001	CYLINDER HEAD COVER	1
3	172MM-021006	STOP PLATE	1
4	152MI-021011	SEAL WASHER.	1
5	172MM-021100	SWING ARM.INLET AXIS	1
6	172MM-021200	SWING ARM.OUTLET AXIS	1
7	172MM-021400	OUTER ENGINE OIL PIPE	1
8	152MI-021001	OIL PIPE RUBBER RING	1
9	172MM-021431	OIL PIPE MOUNT	1
10	152MI-021003	SHOCK ABSORBER RUBBER STRIP	1
11	152MI-021004	REAMED BOLT A M8X25	1
12	152MI-021015	REAMED BOLT M12X1.25	1
13	152MI-021013	REAMED BOLT M8X25	1
14	152MI-021008	UPPER OBSERVATION HOLE CAP	1
15	152MI-021016	WASHER 8	3
16	152MI-021012	EAR WASHER	1
17	152MI-021014	WASHER 12	2
18	152MI-021009	UPPER OBSERVATION HOLE SEAL	1
19	152MI-021010	SWING ARM AXIS SEAL RING	2
20	818-M5X16-D·Cr	CRUCIFORM SLOT SCREW	1
21	848-6-D·Cr	SMALL WASHER	2
22	152MI-021005	LOCATION PIN Φ10X14	2
23	BOLT M6X12	BOLT M6X12	3

4、CYLINGDER HEAD CASEING ASSY

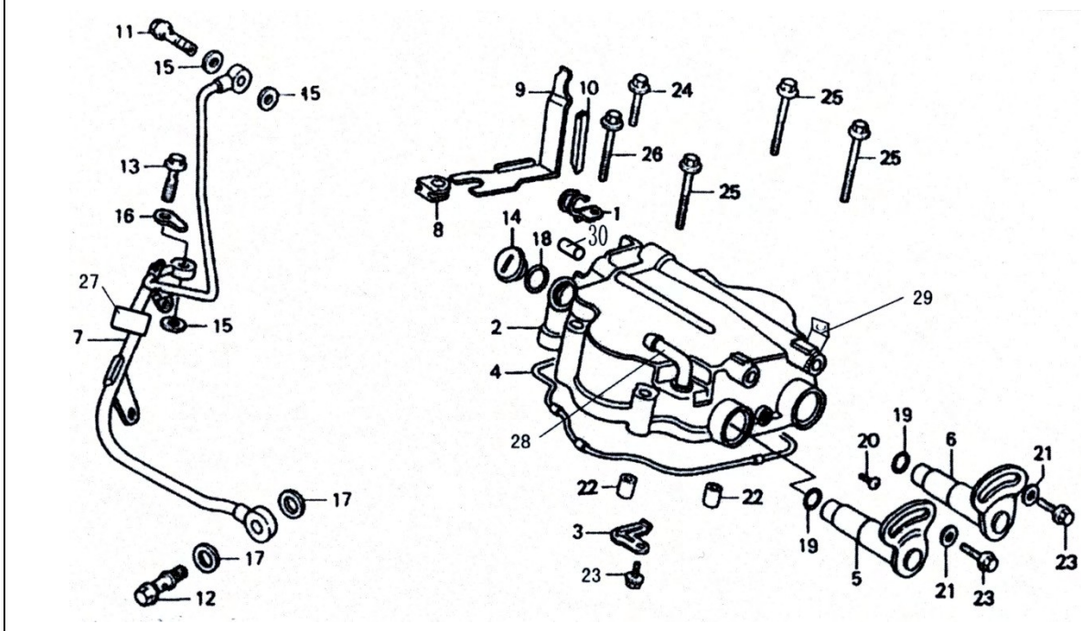

No.	P/N	ENGLISH	Qty
24	BOLT M6X25	BOLT M6X25	1
25	152MI-013010	BOLT M6X50	3
26	152MI-021018	BOLT M6X55	1
27	172MM-021404	SHOCK ABSORBER SLEEVE	1
28	172MM-021002	BREATH PIPE FAUCET	1
29	172MM-021300	AIR FILTER MOUNT	1
30	172MM-021008	BLOCKING	1

5、CYLINGDER HEAD ASSY

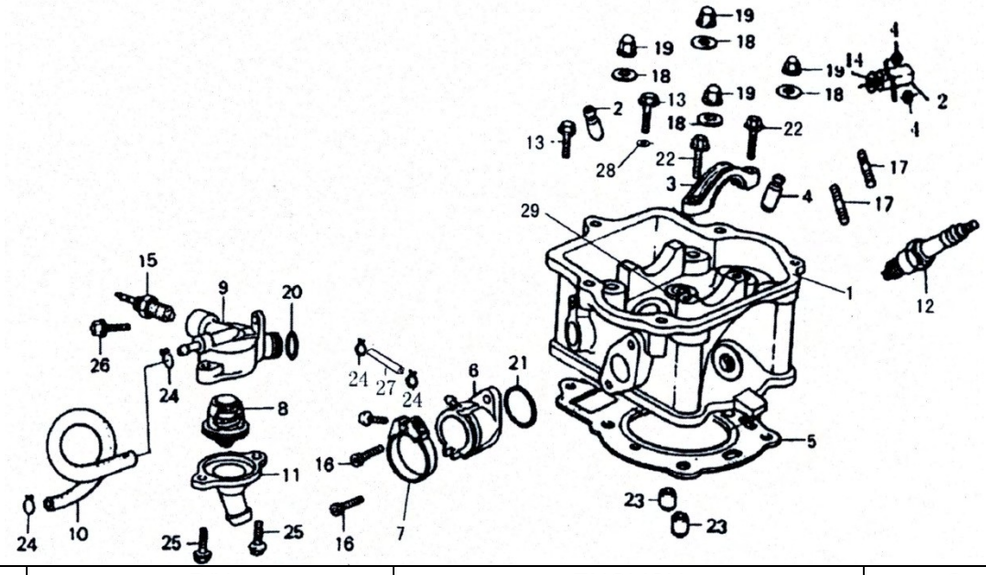

No.	P/N	ENGLISH	Qty
1	172MM-022100	CYLINDER HEAD	1
2	172MM-022700	EXHAUST FLANGE	1
3	152MI-022014	BEARING COVE.CAM AXIS	1
4	172MM-022008	EXHAUST NUT	2
5	172MM-022010	CYLINDER HEAD SEAL WASHER	1
6	172MM-022900	CARBURETOR SEAT UNIT	1
7	172MM-022500	AIR INLET PIPE CLAMP UNIT	1
8	152MI-022810	THERMOSTAT	1
9	152MI-022803	UPPER THERMOSTAT SHELL	1
10	152MI-022021	CARBURETOR RUBBER PIPE1	1
11	172MM-022601	LOWER THERMOSTAT SHELL	1
12	172MM-022400	SPARK PLUG	1
13	152MI-021017	BOLT M6X25	2
14	172MM-022800	BREATH SEAL WASHER	1
15	152MI-022600	WATER TEMP SENSOR	1
16	6191-M6X18-D·Cr	SOCKET HEAD SCREW	2
17	172MM-022007	DOUBLE-SCREW BOLT	2
18	152MI-022012	WASHER 8	4
19	152MI-022013	CAP NUT M8	4
20	152MI-022804	"O" RING 14.8X1.9	1
21	172MM-022009	"O" RING 31X2	1
22	152MI-022020	BOLT M6X22	2
23	152MI-021005	LOCATION PIN Φ10X14	2

5、CYLINGDER HEAD ASSY

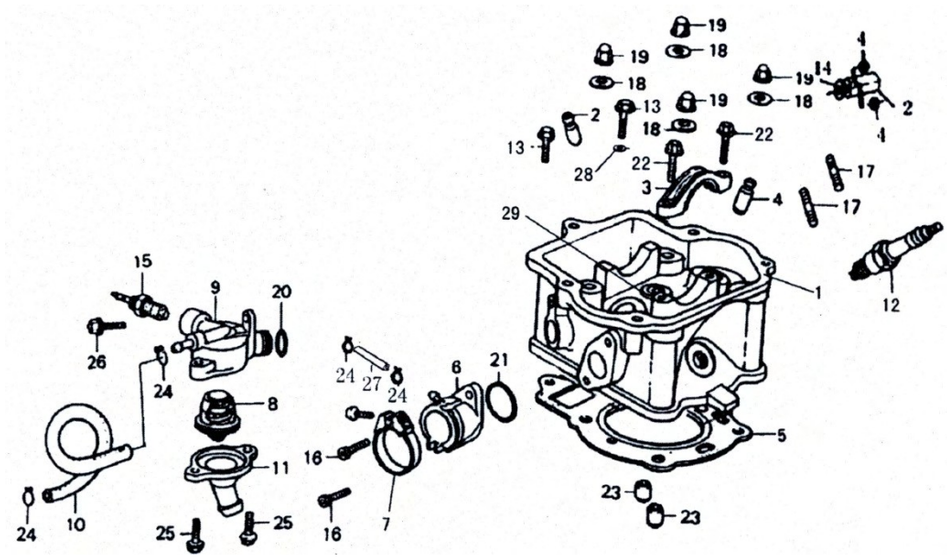

No.	P/N	ENGLISH	Qty
24	621-A6.5	STEEL RING CLAMP	2
25	152MI-090005	BOLT M6X16	2
26	152MI-023008	BOLT M6X18	1
27	152MI-022017	CARBURETORS BREATHE PIPE.	1
28	848-6-D·Cr	SMALL WASHER	1
29	152MI-022303	SCREW BLOCKAGE	1

6、CYLINGER BODY ASSY

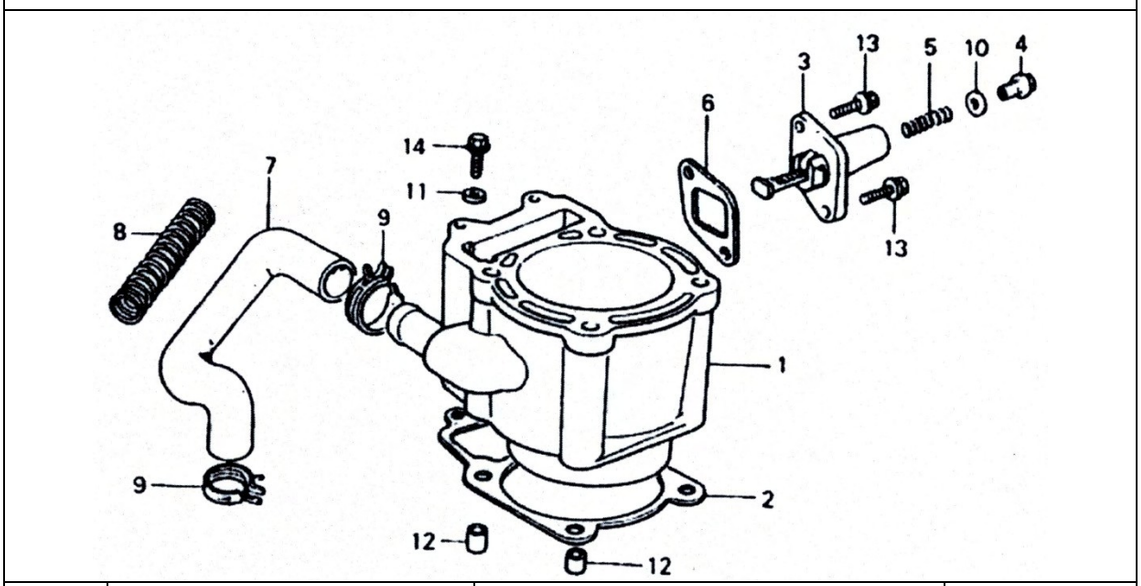

No.	P/N	ENGLISH	Qty
1	172MM-023100	CYLINDER	1
2	172MM-023002	CYLINDER SEAL WASHER	1
3	152MI-023300	TENSIONER UNIT	1
4	152MI-023307	SPRING SEAT BOLT	1
5	152MI-023306	TENSIONER SPRING	1
6	152MI-023004	TENSIONER SEAL WASHER	1
7	172MM-023007	WATER INLET RUBBER PIPE	1
8	172MM-023009	WATER PIPE JACKET	1
9	621-B24	STEEL BAND CLAMP	2
10	152MI-023305	WASHER 8.5	1
11	848-6-D·ZN	SMALL WASHER	1
12	152MI-021005	LOCATION PIN Φ10X14	2
13	152MI-023008	BOLT M6X18	2
14	152MI-080013	BOLT M6X22	1

7、TIMING CHAIN

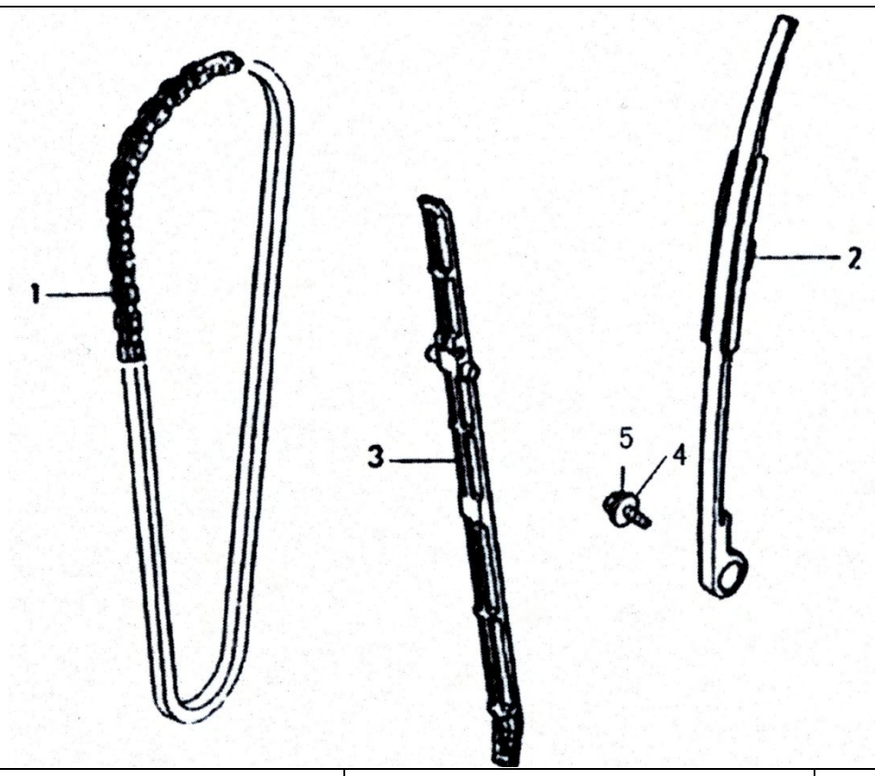

No.	P/N	ENGLISH	Qty
1	172MM-022200	CHAIN UNIT	1
2	172MM-023200	TENSION PLATE	1
3	172MM-023001	CHAIN GUIDE PLATE	1
4	96-6-D·Zn	BIG WASHER	1
5	5781-M6X12-D·Zn	BOLT	1

8、MAGNETOR ASSY

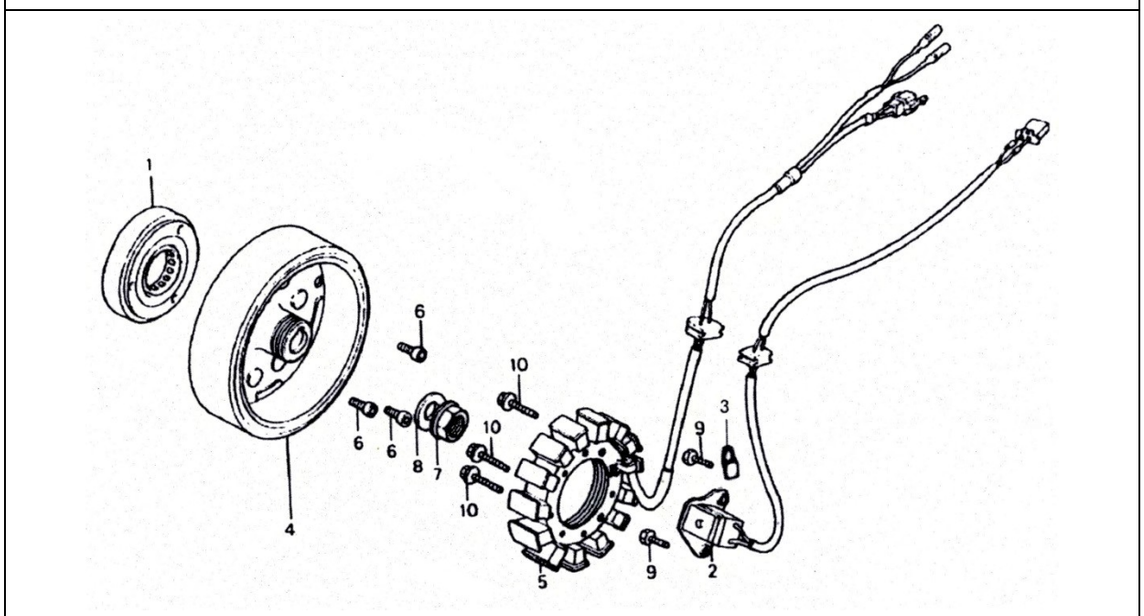

No.	P/N	ENGLISH	Qty
1	172MM-094000	FREE-WHEELING CLUTCH	1
2	172MM-033000	TRIGGER COIL	1
3	172MM-013008	CABLE PRESS BAND	1
4	172MM-031000	FREE-WHEELING	1
5	172MM-032000	STATOR UNIT	1
6	70.1-M8X18	SOCKET HEAD SCREW	3
7	172MM-040001	NUT M16X1	1
8	172MM-040002	WASHER16.3X30X2	1
9	152MI-030002	BOLT M5X16	2
10	152MI-060002	BOLT M6X30	3

9、ADMISSION MACHANISM

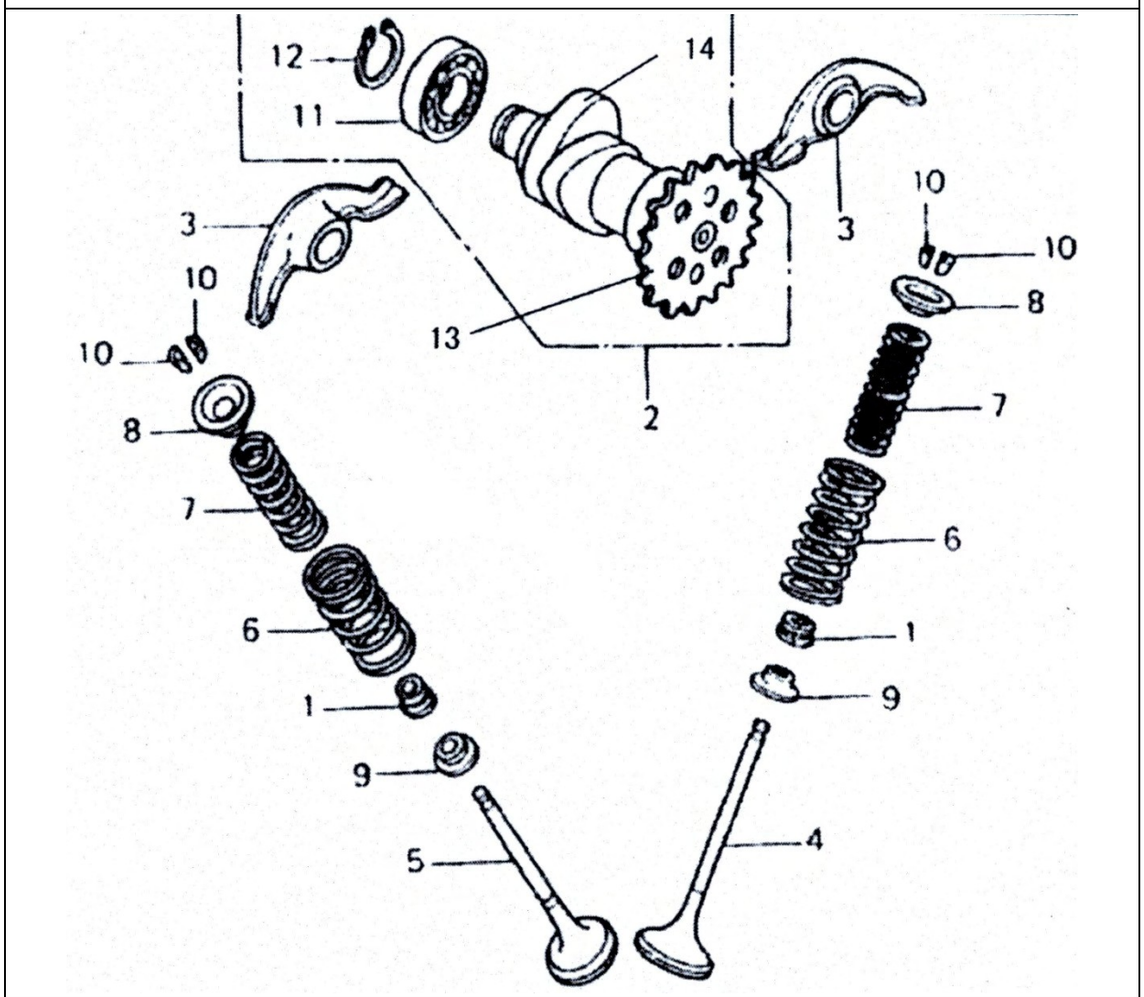

No.	P/N	ENGLISH	Qty
1	152MI-022500	VALVE ROD SEAL	2
2	172MM-022300	CAM UNIT	1
3	152MI-021007	SWING ARM	2
4	172MM-022001	INTAKE VALVE	1
5	172MM-022005	EXHAUST VALVE	1
6	172MM-022002	OUTTER VALVE SPRING	2
7	172MM-022003	INNER VALVE SPRING	2
8	152MI-022005	VALVE SPRING PAN	2
9	152MI-022001	VALVE SPRING SEAT	2
10	152MI-022006	VALVE CLAMP	4
11	NTN: 16002	BALL BEARING	2
12	894.A-1-15	RETAINER RING AXIS	1
13	172MM-022310	CHAIN PULLY	1
14	172MM-022301	CAM AXIS	1

10、CRANK LINK LEVER & PISTON

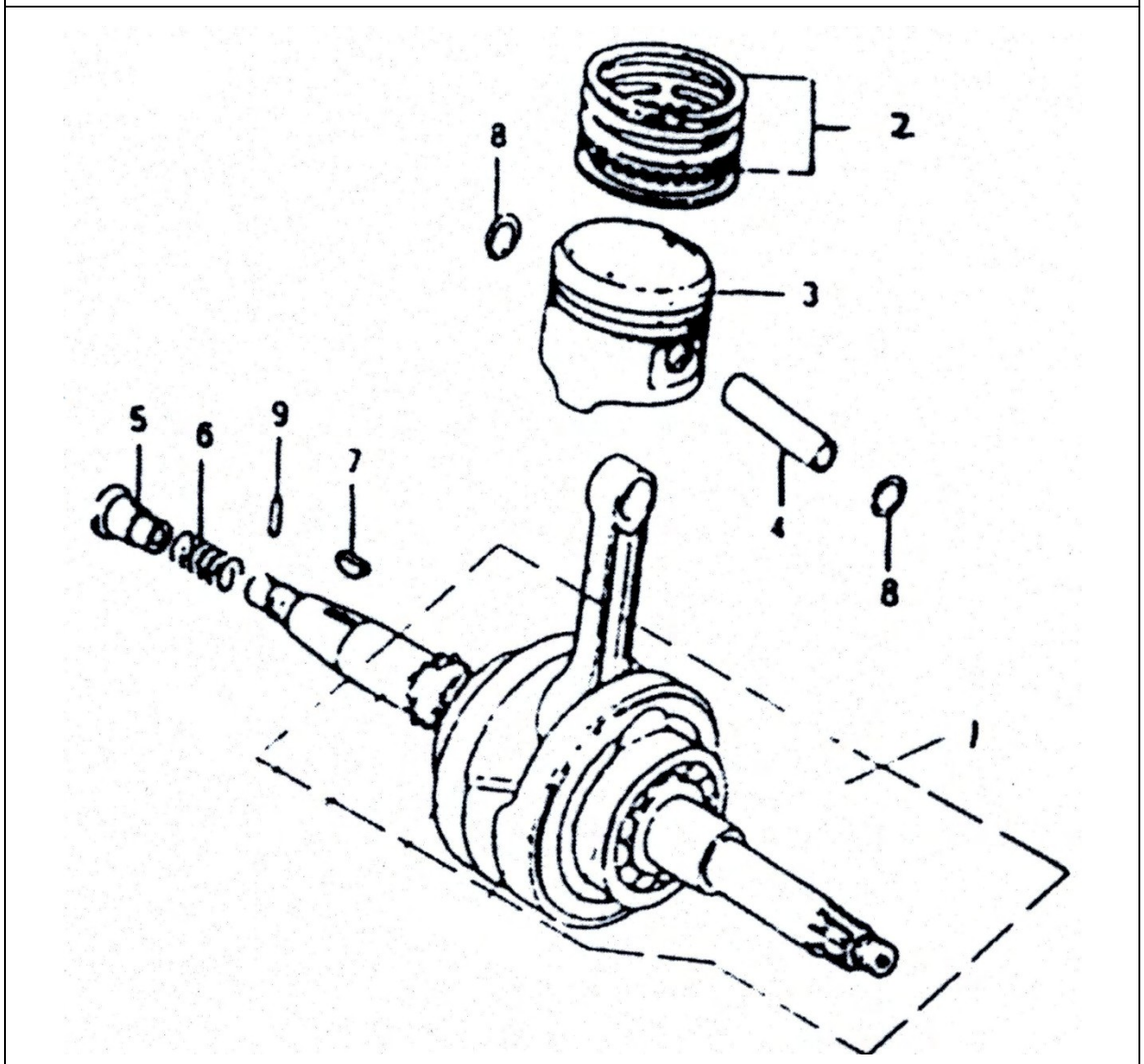

No.	P/N	ENGLISH	Qty
1	172MM-A-041000	CRANK LINK UNIT	1
2	172MM-040008	PISTON RING	1
	172MM-040009	PISTON RING	1
	172MM-042000	OIL RING	1
3	172MM-040005	PISTON	1
4	172MM-040007	PISTON PIN	1
5	152MI-040011	OIL CHANNEL JOINT	1
6	152MI-040010	JOINT SPRING	1
7	152MI-040006	WOODRUFF KEY	1
8	172MM-040006	PISTON PIN STOP RING	2
9	119-P2X14	PIN	1

11、SPEED CHANGER.

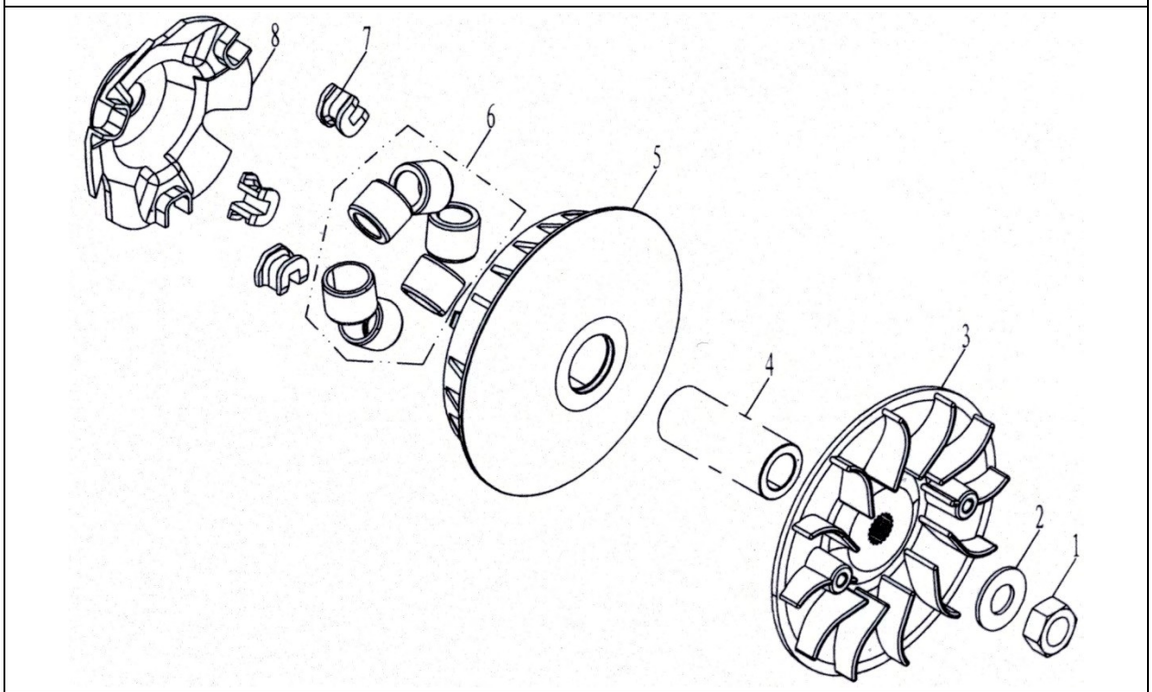

No.	P/N	ENGLISH	Qty
1	172MM-021007	NUT M14X1.5	1
2	172MM-021006	WASHER14.5X30.2	1
3	172MM-A-051005	DRIVE WHEEL PAN	1
4	172MM-A-051003	DRIVE WHEEL PAN SLEEVE	1
5	172MM-A-051100	MOVABLE DRIVE PAN	1
6	172MM-A-051200	OFFCENTER ROLLER	6
7	172MM-A-051004	SLIDING BLOCK	3
8	172MM-A-051002	PUSH PAN	1

12、CLUTCH ASSY

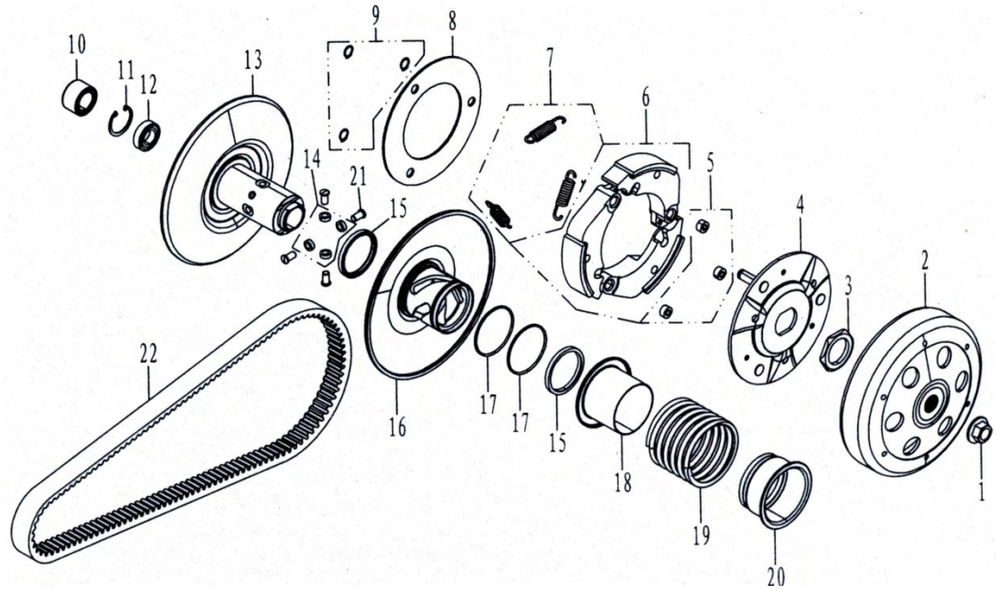

No.	P/N	ENGLISH	Qty
1	172MM-052008	BOLT M12X1.25	1
2	172MM-A-052500	OUTTER WHEEL DISC	1
3	172MM-052005	THIN NUT M30X1	1
4	172MM-A-052400	DRIVE PAN UNIT	1
5	172MM-A-052200	DAMPING RUBBER BLOCK	3
6	172MM-A-052600	CLUTCH BLOCK	3
7	172MM-A-052006	RELEASE SPRING	3
8	172MM-A-052003	SIDE PAN	1
9	896-SW9	SPLIT WASHER	3
10	172MM-052310	NEEDLE BEARING	1
11	893.1-RR28	HOLE RETAINER RING	1
12	278-B1060902	BEARING	1
13	172MM-A-052300	DRIVEN PAN UNIT	1
14	172MM-A-052001	GALLOWS ROLL	4
15	172MM-A-052104	DRIVEN PAN GREASE SEAL	2
16	172MM-A-052100	MOVABLE DRIVEN PAN	1
17	3452.1-46.2X1.8	"O" SEAL RING	2
18	172MM-A-052007	SEAL BUSHING	1
19	172MM-A-052004	CLUTCH SPING	1
20	172MM-A-052009	SLEEVE	1
21	172MM-A-052002	GUIDE PIN	4
22	172MM-B-053000	COG BELT	1

13、GEARBOX COVER ASSY

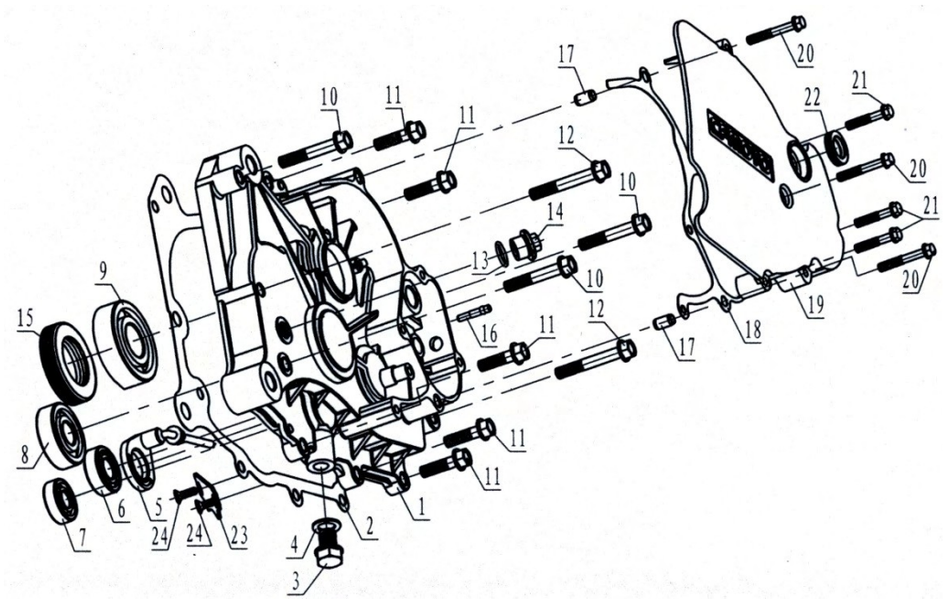

No.	P/N	ENGLISH	Qty
1	172MM-C-060001	GEARBOX COVER	1
2	172MM-C-060002	GEAR BOX PAPER WASHER	1
3	172MM-013005	BOLT M12X1.5.OIL OUTLET	1
4	152MI-021014	WASHER12	1
5	172MM-B-069000	SHIFT DISPLAY SWITCH	1
6	276-6202-RS	BALL BEARING	1
7	276-B6201	BALL BEARING	1
8	276-B6203	BALL BEARING	1
9	276-6305-RS	BALL BEARING	1
10	172MM-B-011107	BOLT M8X48	3
11	172MM-B-011111	BOLT M8X30	5
12	1P52MI-A-011007	BOLT M8X55	2
13	CF188-332004	"O" RING 19X2.5	1
14	CF188-332003	OIL INLET BOLT	1
15	172MM-C-060003	OIL SEAL 32X62X7	1
16	CF188-310028	AIR PIPE JOINT	1
17	152MI-080008	LOCATION PIN Φ8X14	2
18	172MM-C-060007	PAPER WASHER.	1
19	172MM-C-060006	CHAIN PULLY COVER	1
20	5787- M6X40-D·Cr	BOLT	3
21	152MI-080012	BOLT M6X32	3
22	CF188-065002	OIL SEAL SD 15X25X5	1
23	172MM-B-011113	OIL STOP CHIP	1
24	819-M4X12	SCREW M4X12	2

14、TRANSMISSION GEAR ASSY

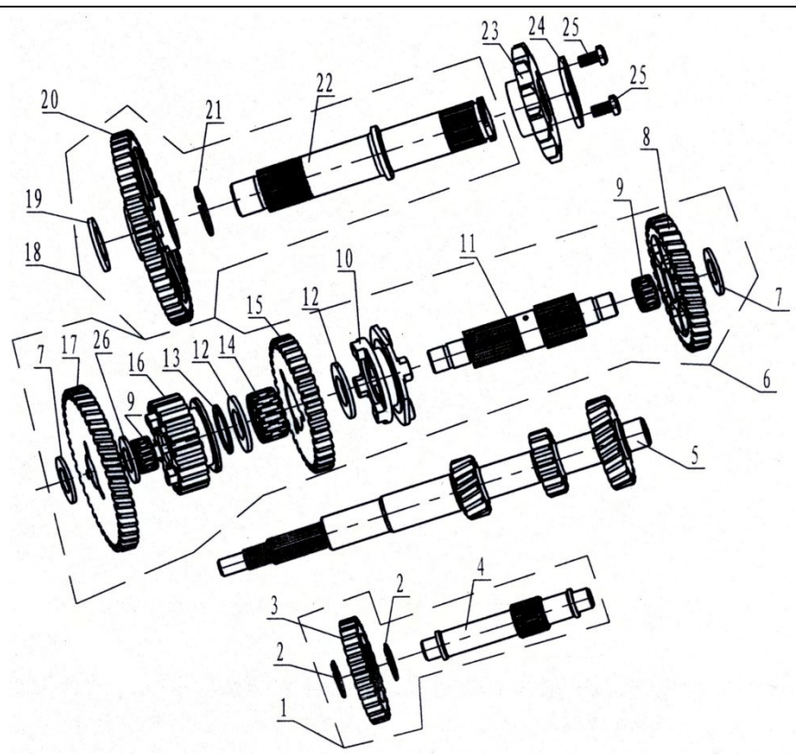

No.	P/N	ENGLISH	Qty
1	172MM-B-067000	TRANSITION GEARS ASSY	1
2	89431-RR 20	RETAINER RING	2
3	172MM-B-067000	TRANSITION GEAR	1
4	172MM-B-067001	TRANSITON GEAR-AXIS	1
5	172MM-B-060001	MAIN AXIS	1
6	172MM-B-062000	SECONDARY AXIS ASSY	1
7	172MM-B-062006	WASHER.15X28X2	2
8	172MM-B-062002	HIGH SPEED DRIVING GEAR	1
9	NTN: K16X20X10	NEEDLE BEARING	2
10	172MM-B-062009	SHIFT SLIDING SLEEVE	1
11	172MM-B-062001	SECONDARY AXIS	1
12	172MM-B-062007	WASHER 24X33X2	2
13	894.1-24	CIRCLIP.AXIS	1
14	K24X28X10	NEEDLE BEARING	1
15	172MM-B-062003	REVERSE DRIVEN GEAR	1
16	172MM-B-062005	OUTPUT DRIVEN GEAR	1
17	172MM-B-062004	LOW SPEED DRIVEN GEAR	1
18	172MM-C-063000	OUTPUT AXIS ASSY	1
19	172MM-C-063002	WASHER 20X32X2.5	1
20	172MM-C-063005	OUTPUT DRIVEN GEAR	1

14、TRANSMISSION GEAR ASSY

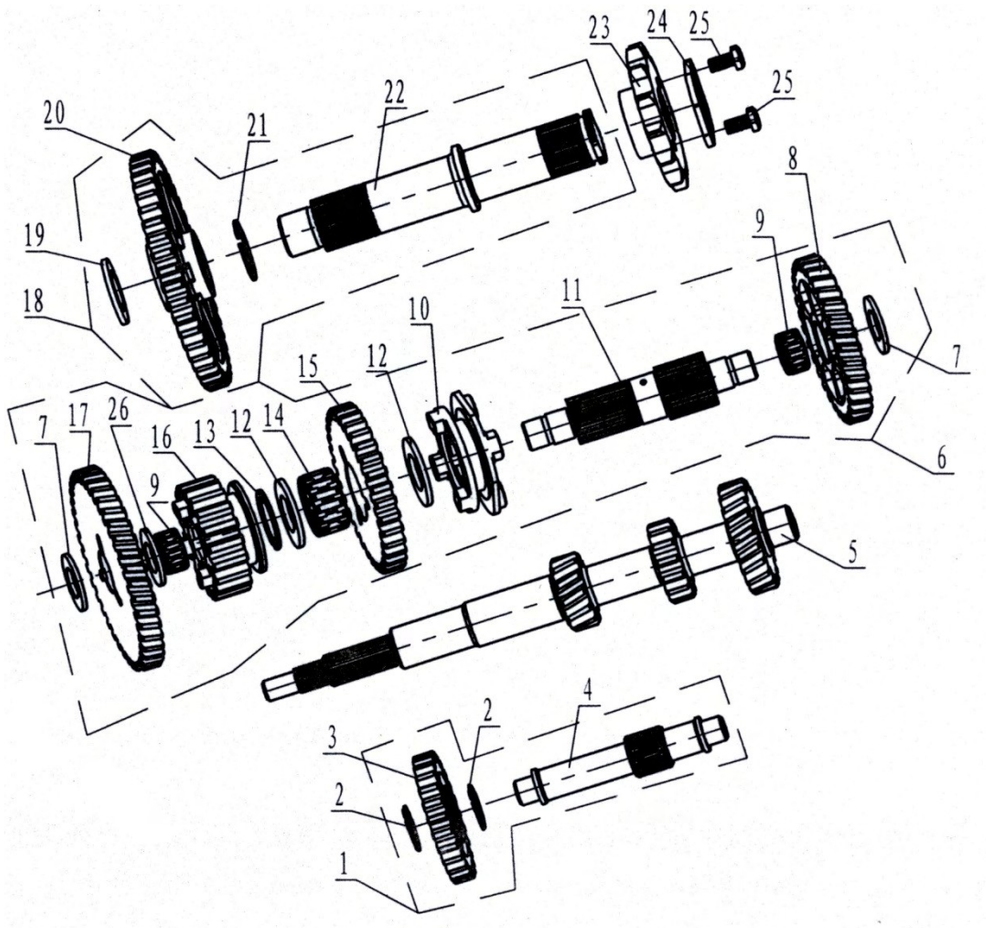

No.	P/N	ENGLISH	Qty
21	CF188-061007	RETAINER RING.AXIS 25	1
22	172MM-C-063001	OUTPUT AXIS	1
23	DN250.07.00.00.05	CHAIN PULLEY	2
24	172MM-C-060005	CHAIN PULLEY PRESS PLATE	1
25	172MM-C-063009	BOTL M6X12	1
26	172MM-B-062008	WASHER 16X28X2	1

15、GEAR SHIFT MACHANISM

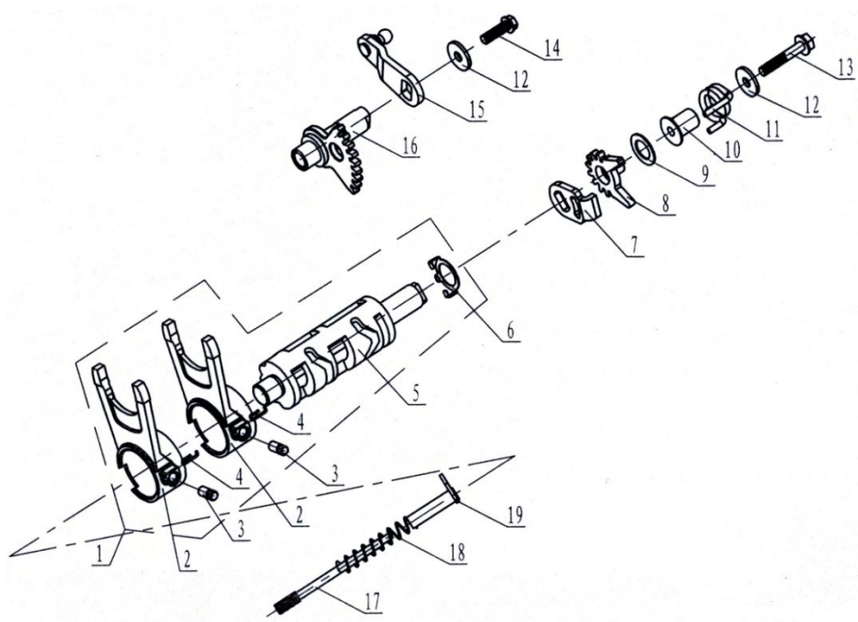

No.	P/N	ENGLISH	Qty
1	172MM-B-066000	SHIFT DRUM ASSY	1
2	172MM-B-066002	SHIFT YOKE	2
3	172MM-B-066003	SHIFT YOKE PIN	2
4	172MM-B-066004	SHIFT YOKE PIN SNAP RING	2
5	172MM-B-066001	SHIFT DRUM	1
6	172MM-B-066005	SPEED DISPLAY TOUCH CHIP	1
7	CF188-065201	DRIVEN SECTOR GEAR WASHER	1
8	CF188-065203	DRIVING SHIFT SECTION GEAR	1
9	CF188-065204	WASHER 13.5X22X1	1
10	CF188-065202	DRIVING SHIFT SECTOR GEAR AXIS	1
11	CF188-065204	DRIVEN SECTOR GEAR SPRING	1
12	CF188-065206	WASHER 6.6X20X2	2
13	151MI-013008	BOLT M6X35	1
14	151MI-023010	BOLT M6X20	1
16	172MM-C-065100	DRIVE SHIFT SECTOR GEAR COMP	1
17	172MM-B-066007	SHIFT AXIS	1
18	172MM-B-066009	SHIFT PRESS SPRING	1
19	172MM-B-066008	SHIFT PRESS BUSHING	1

16、ENGINE OIL PUMP ASSY

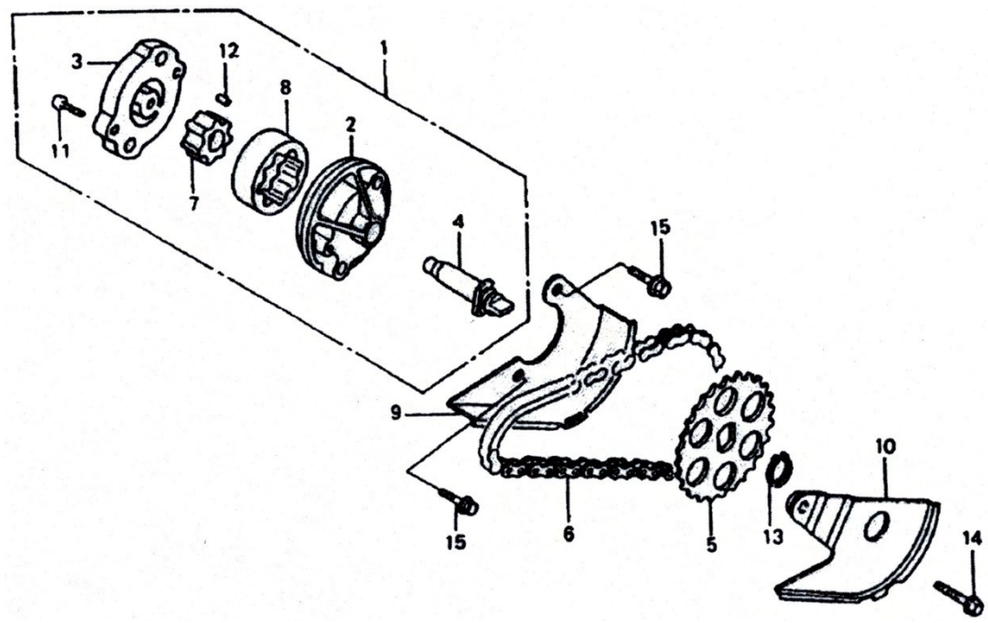

No.	P/N	ENGLISH	Qty
1	151MI-071000	OIL PUMP ASSY	1
2	151MI-071002	OIL PUMP BODY	1
3	151MI-071003	OIL PUMP COVER	1
4	151MI-071001	OIL PUMP AXIS	1
5	151MI-071001	OIL PUMP CHAIN PULLEY	1
6	151MI-073000	CHAIN.OIL PUMP	1
7	151MI-071004	INNER ROTOR.OIL PUMP	1
8	151MI-071005	OUTTER ROTOR.OIL PUMP	1
9	151MI-070002	OIL PUMP SPACER PLATE A	1
10	151MI-072000	OIL PUMP SPACER PLATE B	1
11	878-M3X12	SCREW	1
12	151MI-071006	LOCATION PIN 4X6.5	1
13	894.1-B10	RETAINER RING.AXIS	1
14	151MI-021019	BOLT M6X12	1
15	151MI-070003	BOLT M6X28	2

17、COOLANT PUMP ASSY

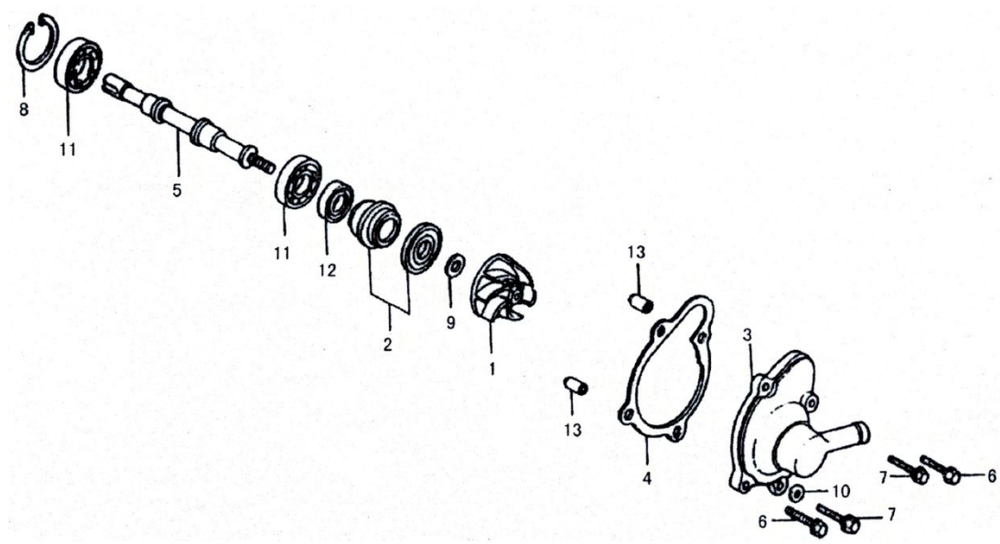

No.	P/N	ENGLISH	Qty
1	172MM-080004	WATER PUMP IMPELLER	1
2	152MI-081000	WATER SEAL ASSY	1
3	172MM-080003	WATER PUMP COVER	1
4	172MM-080002	COVER SEAL WASHER	1
5	172MM-080001	WATER PUMP AXIS	1
6	152MI-013009	BOLT M6X40	2
7	152MI-021017	BOLT M6X25	2
8	893.1-RR19	HOLE RETAINER RING	1
9	152MI-080007	WASHER.7.5X13X1.2	1
10	152MI-080011	WASHER.6X12X1	1
11	NTN: 6800	NEEDLE BEARING	2
12	172MM-080005	GREASE SEAL 10X20X5	1
13	152MI-080008	LOCATION PIN Φ8X14	2

18、ELECTRIC STARTER ASSY

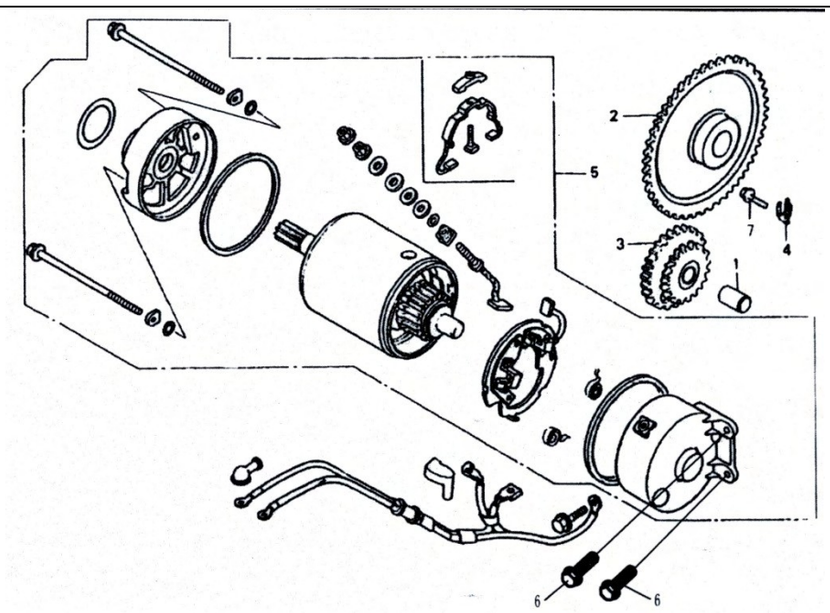

No.	P/N	ENGLISH	Qty
1	172MM-090001	DUPLICATE GEAR AXIS.	1
2	172MM-092000	DRIVEN GEAR COMP	1
3	172MM-091000	DUPLICATE GEAR COMP	1
4	172MM-090007	MOUNTING PLATE	1
5	172MM-093000	STARTER COMP	1
6	152MI-080013	BOLT M6X22	2
7	172MM-090008	BOLT M6X14	1

19、CARBURETOR ASSY

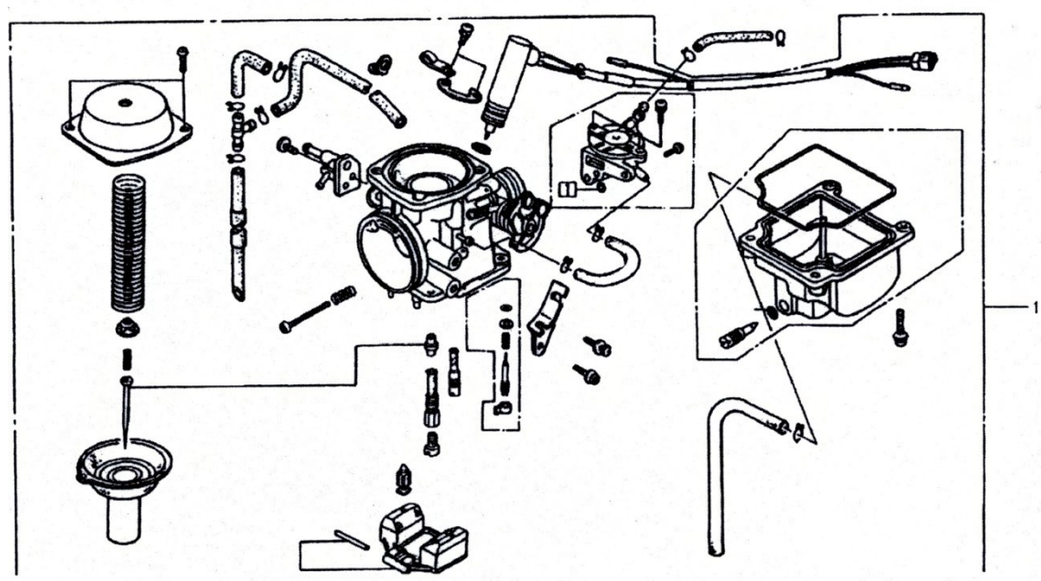

No.	P/N	ENGLISH	Qty
1	172MM-100000	CARBURETOR ASSY	1

20、FRAME & FUEL TANK & RADIATOR

20 FRAME&FUEL TANK&RADIATOR

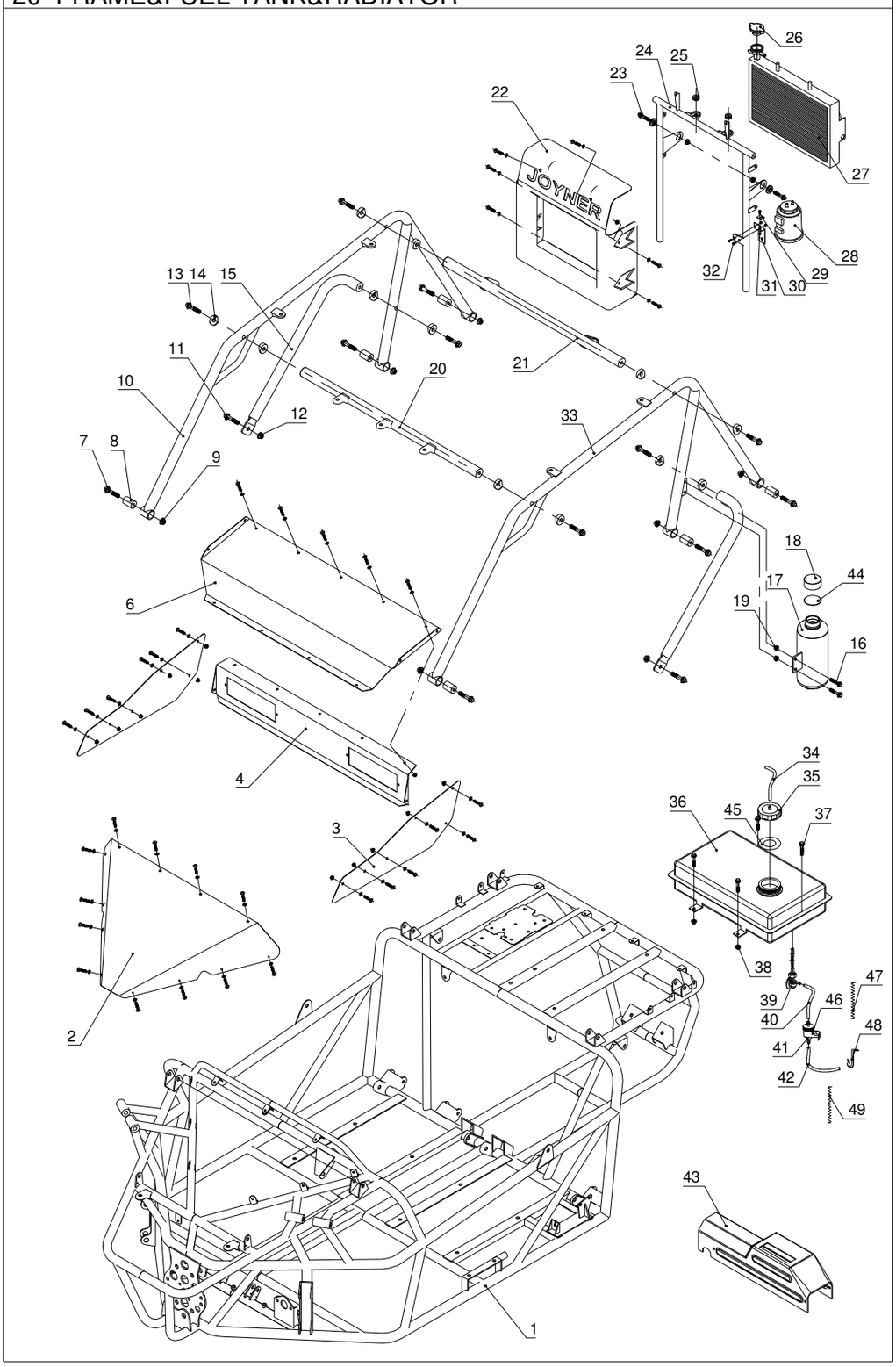

20 FRAME&FUEL TANK&RADIATOR

NO.	PART NO.	DESCRIPTION	Q'TY
1	DN250.01.01.00.00	MAIN FRAM	1
2	DN250.01.02.00.06	COVER.FR	1
3	DN250.01.02.00.04	LEFT SPORT WING	2
4	DN250.01.02.00.03	LOWER SPORT WING	1
6	DN250.01.02.00.02	UPPER SPORT WING	1
7	5787-M12X1.25X55	FLANGE BOLT M12X1.25X55	6
8	D250.11.771	NYLON BUSHING	6
9	6177.1-M12	FLANGE NUT M12	6
10	DN250.01.02.08.00A	RIGHT PROTECTIVE BAR	1
11	5787-M10X1.25X20	FLANGE BOLT M10X1.25X20	1
12	6177.1-M10	FLANGE NUT M10	2
13	5787-M10X1.25X65	FLANGE BOLT M10X1.25X65	2
14	DN250.01.02.00.01	ARC CUSHION ? 32	12
15	DN250.01.02.03.00	REINFORCED BAR	2
16	5787-M8X20	FLANGE BOLT M8X20	2
17	D800.04.02.02.00	WATER TANK.GK800	1
18	D800.04.02.02.01	WATER TANK CAP.GK800	1
19	6187.1-M8	FLANGE LOCK NUT M8	2
20	DN250.01.02.02.00	TOP PROTECTIVE BAR1	1
21	DN250.01.02.05.00	TOP PROTECTIVE BAR2	1
22	DI250.05.01.00.01	RADIATOR SAFETY COVER	1
23	5787-M8X30	FLANGE BOLT M8X30	2
24	DN250.01.02.06.00	RADIATOR SUPPORT	1
25	JD1910003	RADIATOR RUBBER BUSHING	2
26	D250.09.904	RADIATOR CAP	1
27	DI250.05.01.01.00	RADIATOR	1
28	D650.04.06.01.00	ACT(ACTIVATED CARBON TANK)	1
29	D650.04.06.00.02	BLOCK SHEET.ACT	1
30	D650.04.06.00.01	SUPPORT.ACT	1
31	6187.1-M6	FLANGE LOCK NUT M6	3
32	5787-M6X15	FLANGE BOLT M6X15	3
33	DN250.01.02.01.00A	LEFT PROTECTIVE BAR	1
34	DN250.05.02.00.04	INLET PIPE.ACT	1
35	JD1135000	FUEL TANK CAP	1
36	DN250.05.02.03.01	FUEL TANK	1
37	5787-M8X20	FLANGE BOLT M8X20	4
38	6177.1-M8	FLANGE NUT M8	4
39	JD1138000	FUEL SWITCH	1
40	DN250.05.02.00.04	FUEL PIPE 1	1
41	DS250.11.01.00.09	GAS FILTER	1
42	DN250.05.02.00.05	FUEL PIPE 2	1
43	DN250.01.02.07.00A	SHIFT COVER	1
44	D800.04.02.02.02	SEAL CUSHING.WATER TANK	1
45	JD1135001	RUBBER WASHER	1
46	DN250.05.02.00.02	CLAMP 1.FUEL FILTER	1
47	DN250.05.02.00.06	PROTECTIVE SPRING1.FUEL PIPE	1
48	DN250.05.02.00.03	CLAMP 2.FUEL FILTER	1
49	DN250.05.02.00.07	PROTECTIVE SPRING 2.FUEL PIPE	1
50			

21、FRONT SUSPENSION

21 FRONT SUSPENSION

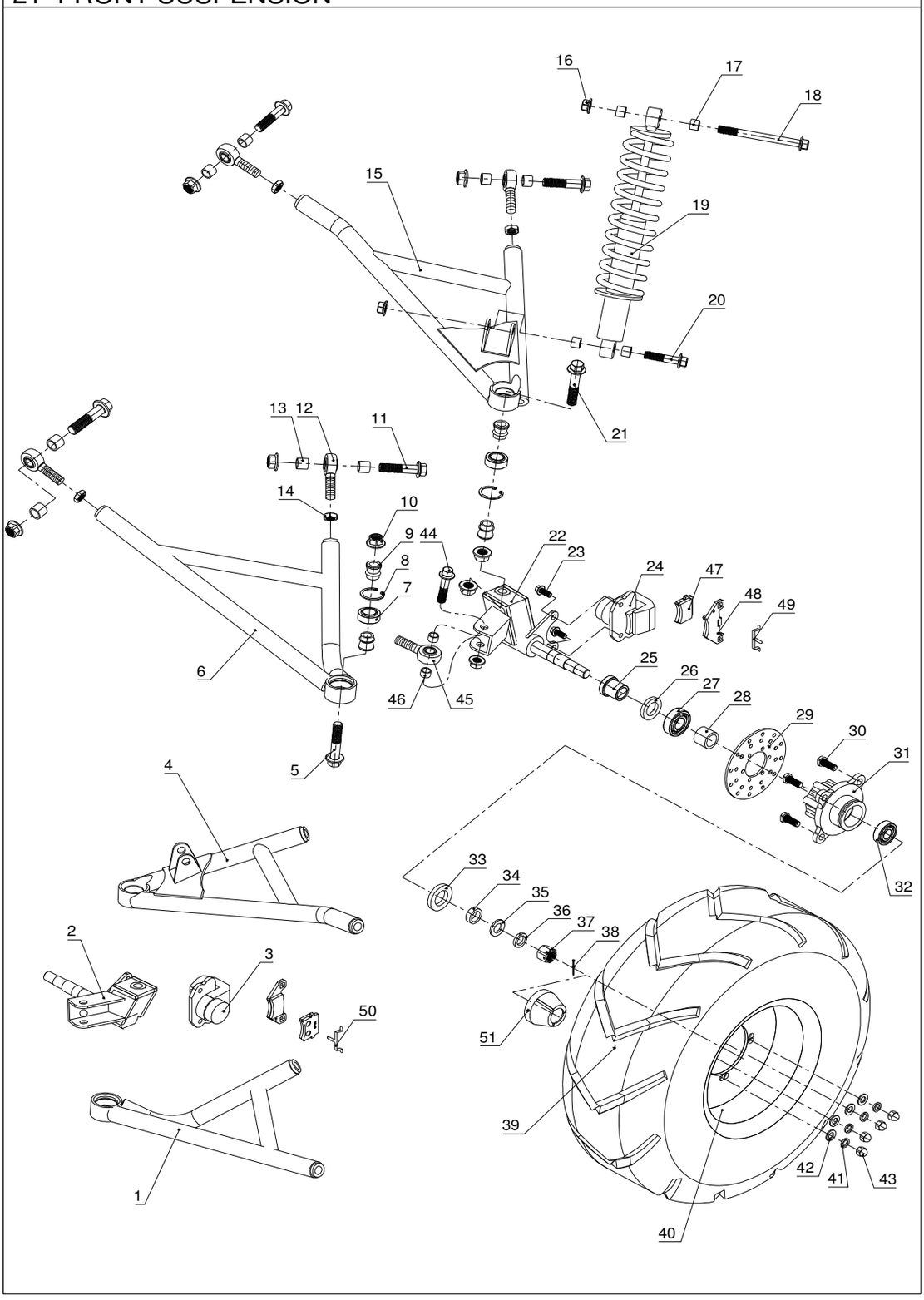

21 FRONT SUSPENSION

NO.	PART NO.	DESCRIPTION	Q'TY
1	DN250.02.03.00.00	RIGHT LOWER A-ARM	1
2	DN250.02.06.00.00	RIGHT KNUCKLE	1
3	DN250.04.01.00.01	BRAKE CLIPPER 1	1
4	DN250.02.01.00.00	RIGHT UPPER A-ARM	1
5	5787-M14X1.5X90	FLANGE BOLT M14X1.5X90	2
6	DN250.02.04.00.00	LEFT UPPER A-ARM	1
7	GE20C	JOINT BEARING GE20C	4
8	893.1-86 35	HOLE RETAINOR RING 35	4
9	DN250.02.00.00.05	SPACER.GE20C	8
10	6177.1-M14x1.5	FLANGE NUT M14x1.5	12
11	5787-M14X1.5X60	FLANGE BOLT M14X1.5X60	8
12	POSA 14	ROD END BEARING 14	8
13	DN250.02.00.00.04	ROD END BEARING SPACER 14	16
14	6172-M14	THIN NUT M14	8
15	DN250.02.02.00.00	LEFT UPPER A-ARM	1
16	6177.1-M12X1.5	FLANGE NUT M12X1.5	6
17	DN250.09.00.00.07	SHOCK ABSORBOR SPACER	8
18	5787-M12X1.5X170	FLANGE BOLT M12X1.5X170	2
19	DN250.02.07.00.00	FR SHOCK ABSORBOR	2
20	5787-M12X1.5X60	FLANGE BOLT M14X1.5X60	8
21	5787-M14X1.5X80	FLANGE BOLT M14X1.5X80	2
22	DN250.02.05.00.00	LEFT KNUCKLE	1
23	5787-M8X15	FLANGE BOLT M8X15	4
24	DN250.04.01.00.02	BRAKE CLIPPER 2	1
25	DN250.02.00.00.03	FRONT WHEEL BUSHING 33.8	2
26	9877.1-FB47X28X7	GREASE SEAL FB47X28X7	2
27	276-B6204	BALL BEARING 6204	2
28	JD0360007	FRONT WHEEL BUSHING 22	2
29	JD0360150	FRONT BRAKE DISC	2
30	DS250.02.00.00.02	FRONT WHEEL KNURLED BOLT	8
31	JD0360200－EU	BEARING HUB	2
32	276-B6203	BALL BEARING 6203	2
33	9877.1-FB40X25X6	GREASE SEAL FB40X25X6	2
34	JD0360006	SMALL SPACER 8	2
35	D250.06.011	REAR WHEEL AXLE WASHER	2
36	93-SW16	SPRING WASHER 16	2
37	6178-M16	SLOTTED NUT M16	2
38	91- 4X40	COTTER PIN 4x40	2
39	DN250.02.08.00.01	TYRE 21X8-10	2
40	JD0760800	RIM 10X5.5	2

21 FRONT SUSPENSION

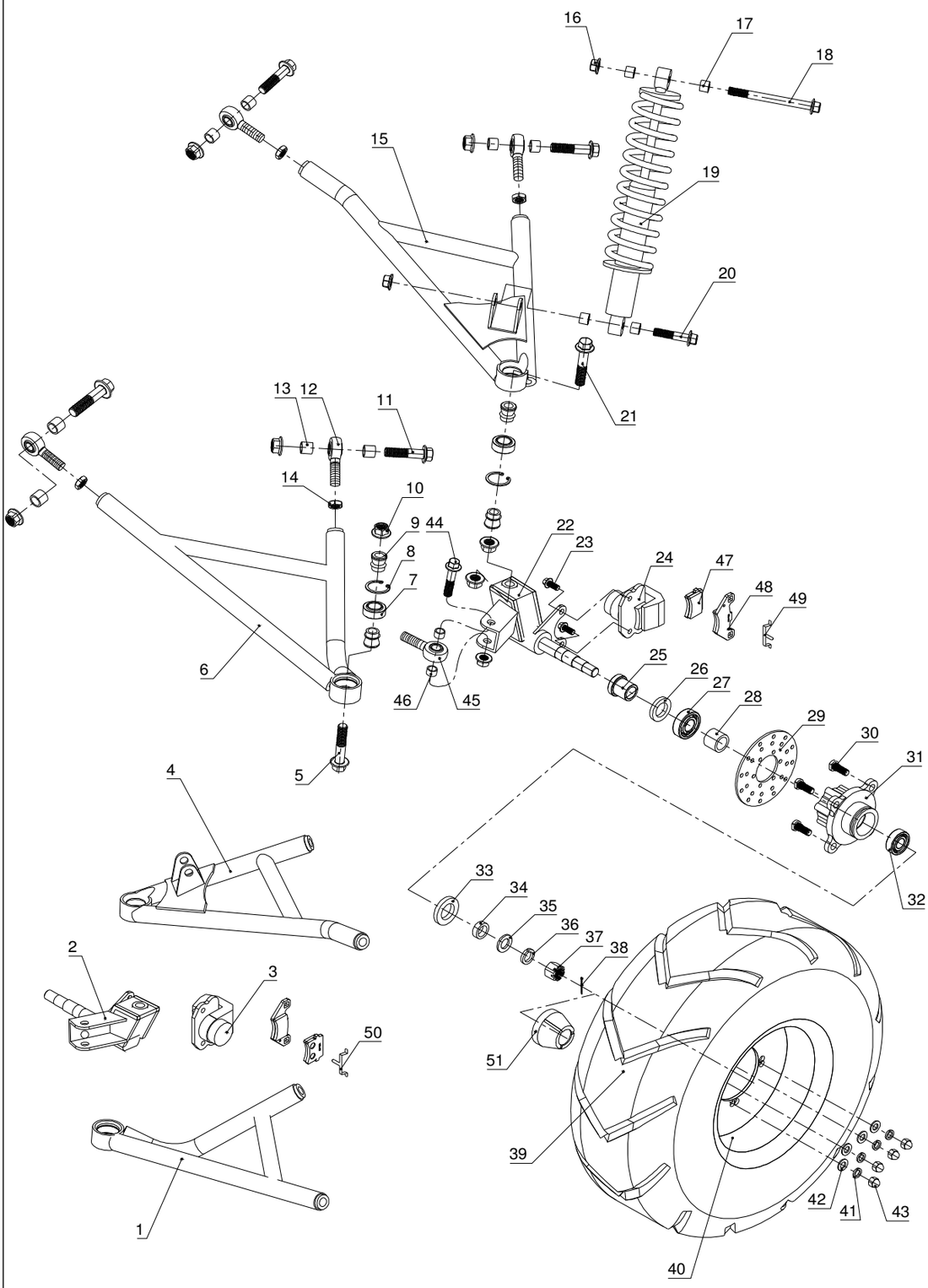

21 FRONT SUSPENSION

NO.	PART NO.	DESCRIPTION	Q'TY
41	93-SW 10	SPRING WASHER 10	8
42	95-PW10	PLAIN WASHER 10	8
43	923-10x1.25	CAPPED NUT M10X1.25	8
44	5787-M12X1.5X80	FLANGE BOLT M12X1.5X80	8
45	POSA 12	ROD END BEARING 12	8
46	D800.05.01.00.03	SPACER|µ12. TIE ROD	8
47	DN250.04.01.00.03	FRACTION PLATE 1	2
48	DN250.04.01.00.04	FRACTION PLATE 2	2
49	DN250.04.01.00.05	BRAKE CLIPPER SPRING PLATE 2	1
50	DN250.04.01.00.06	BRAKE CLIPPER SPRING PLATE 1	1
51	JD0360010	FRONT WHEEL HUB COVER	2

22、 STEERING&THROTTLE&BRAKE&SHIFT

22 STEERING&THROTTLE&BRAKE&SHIFT

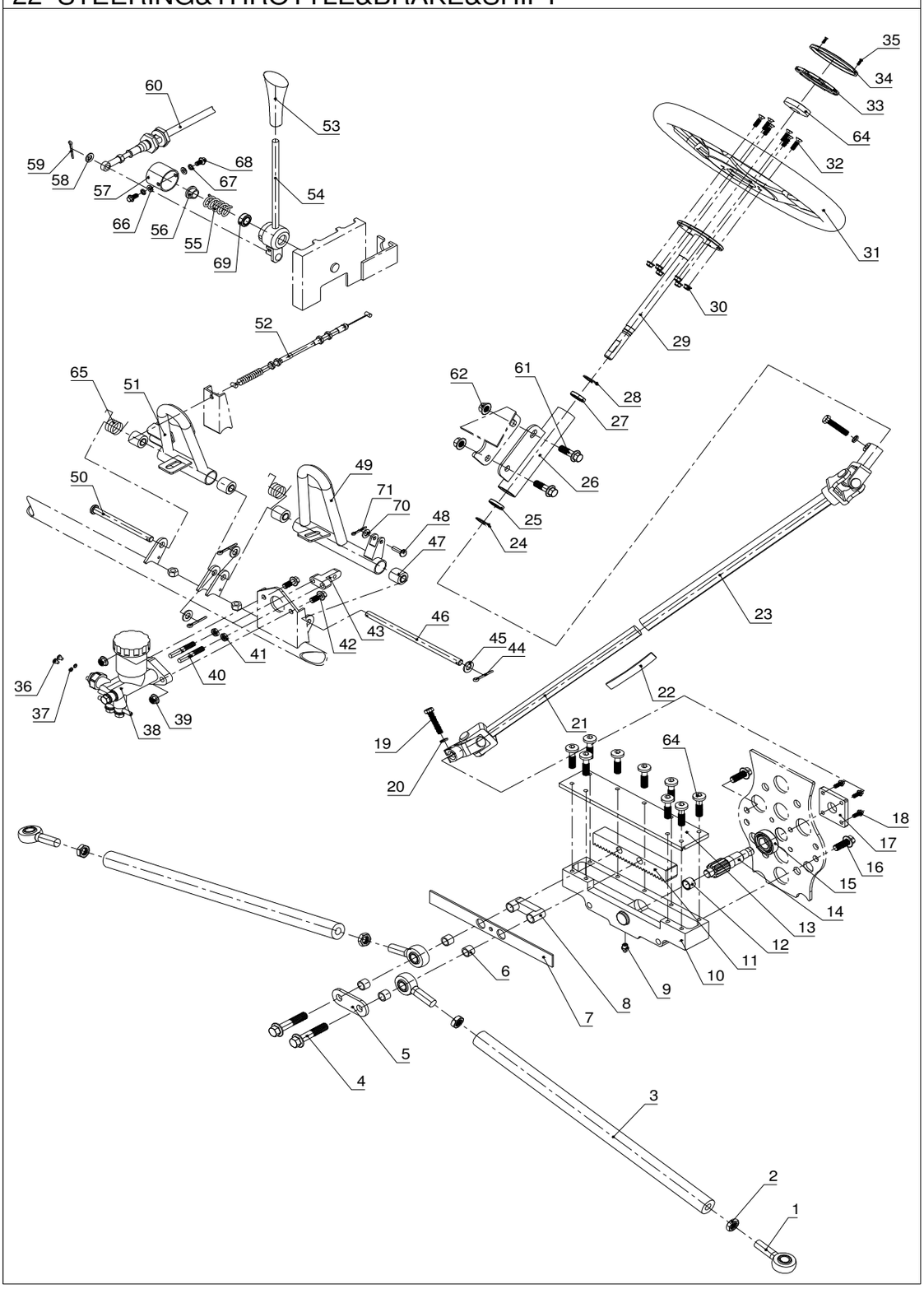

22 STEERING&THROTTLE&BRAKE&SHIFT			
No.	PART NO.	DESCRIPTION	Q'TY
1	POSA12L	ROD END BEARING POSA12L	2
2	6172-M12L	THIN NUT M12L	2
3	DN250.03.02.00.00	TIE ROD	2
4	5785-M12X80	BOLT M12X80	2
5	D800.05.01.00.04	REINFORCED SHEET.TIE ROD	1
6	D800.05.01.00.03	TIE ROD SPACER	8
7	D800.05.01.03.07	DUST GUARD PLATE	1
8	D800.05.01.03.06	TIE ROD SUPPORT	1
9	D800.05.01.03.08	GREASE CUP M8X1	1
10	D800.05.01.03.01	STEERING BOX CASE	1
11	D800.05.01.03.04	STEERING RACK	1
12	D800.05.01.03.10	BUSH BEARING14c7x18x12	1
13	D800.05.01.03.03	STEERING BOX COVER PLATE	1
14	D800.05.01.03.02	STEERING GEAR SHAFT	1
15	D800.05.01.03.09	BALL BEARING 20x42x12	1
16	5787-M10X30	FLANGE BOLT M10x30	2
17	D800.05.01.03.05	BEARING STOP PLATE	1
18	5787- M6X25	FLANGE BOLT M6x25	4
19	5785-M18X30	BOLT M8X30	2
20	93- SW8	SPRING WASHER 8	2
21	DN250.03.04.00.01	SLIP UNIVERSAL JOINT SHAFT	1
22	DN250.03.04.00.03	SPRING PLATE	1
23	DN250.03.04.00.02	SLIP UNIVERSAL JOINT SLEEVE	1
24	893.1-C26	CIRCLIP FOR HOLE 26	1
25	276-B61803	BALL BEARING 61803	1
26	DN250.03.03.00.01	STEERING COLUMN SLEEVE	1
27	276-B61902	BALL BEARING 61902	1
28	893.1-C28	CIRCLIP FOR HOLE 28	1
29	DN250.03.03.00.02	STEERING COLUMN SHAFT	1
30	6187.1- M8	FLANGE LOCK NUT M8	6
31	DI250.03.01.00.00	STEERING WHEEL	1
32	819-M6X25	CROSS SUNK SCREW M6x25	6
33	DI250.03.01.00.02	RUBBER COVE	1
34	DI250.03.01.00.01	PLASTIC COVER	1
35	2673−M4x5	INNER-HEXAGON SUNK SCREW M4x5	2
36	818-M4X5	CROSS PANHEAD SCREW M4x5	2
37	93-SW4	SPRING WASHER 4	2
38	DN250.04.01.01.00	MAIN BRAKE PISTON	1
39	6187.1-M8	FLANGE LOCK NUT M8	2
40	DN250.04.01.00.05	BRAKE PUSH POLE	2
41	6172-M8	THIN NUT M8	2
42	5787-M8X30	FLANGE BOLT M8x30	2
43	D250.10.005	"T" BLOCK	1
44	91-CP3x30	COTTER PIN 3x30	3
45	95-PW10	PLAIN WASHER 10	3
46	DN250.04.00.00.02	BRAKE BOARD FOOT PIN	1

STEERING,THROTTLE,BRAKE&SHIFT

22 STEERING&THROTTLE&BRAKE&SHIFT

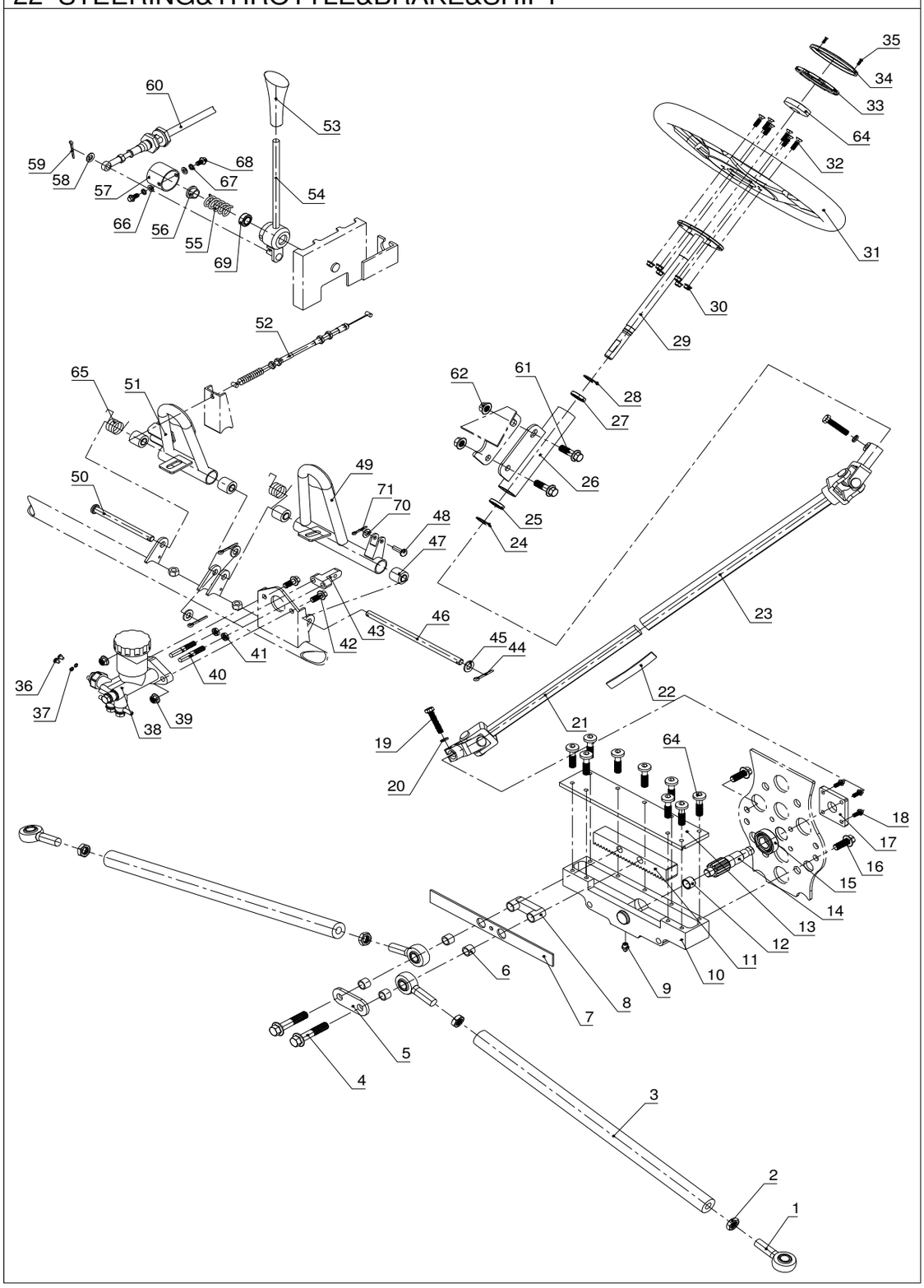

22 STEERING&THROTTLE&BRAKE&SHIFT			
No.	PART NO.	DESCRIPTION	Q'TY
47	D250.04.002	BUFFER BUSHING.LINK ROD	4
48	882-CP6X25	PIN B M6x30	2
49	DN250.04.02.00.00	BRAKE BOARD	2
50	DN250.05.02.01.00	THROTTLE PIN	2
51	DN250.05.02.00.01	THROTTLE BOARD	1
52	DN250.05.02.02.00A	THROTTLE CABLE	1
53	JD10.82.101	SHIFT RUBBER BUSHING	1
54	DI250.05.03.03.00	SHIFT LEVER	1
55	D250.08.004	SHIFT SPRING	1
56	D250.08.005	STOP RING	1
57	D250.08.009	SHIFT LEVER COVER	1
58	95-PW 8	PLAIN WASHER 8	1
59	91-CP3x30	COTTER PIN 3x30	1
60	DN250.05.03.04.00	SHIFT CABLE	1
61	5787-M10X1.25X30	FLANGE BOLT M10x1.25x30	2
62	6177.1-M10x1.25	FLANGE NUT M10x1.25	2
63	6187.1- M6	FLANGE LOCK NUT M6	1
64	DI250.03.00.00.02	RUBBER WASHER	9
65	DN250.04.00.00.01	FOOT BRAKE SPRING.DN250	2
66	95-PW 6	PLAIN WASHER 6	2
67	93-SW6	SPRING WASHER 6	2
68	5787- M6X10	FLANGE BOLT M6X10	2
69	GE12C	JOINT BEARING GE12C	1
70	95-PW6	PLAIN WASHER 6	1
71	91-CP2X20	COTTER PIN 2x20	1
72			
73			
74			
75			
76			
77			
78			
79			
80			
81			
82			
83			
84			
85			
86			
87			
88			
89			
90			
91			
92			

23、ENGINE RACK & TRANSMISSION

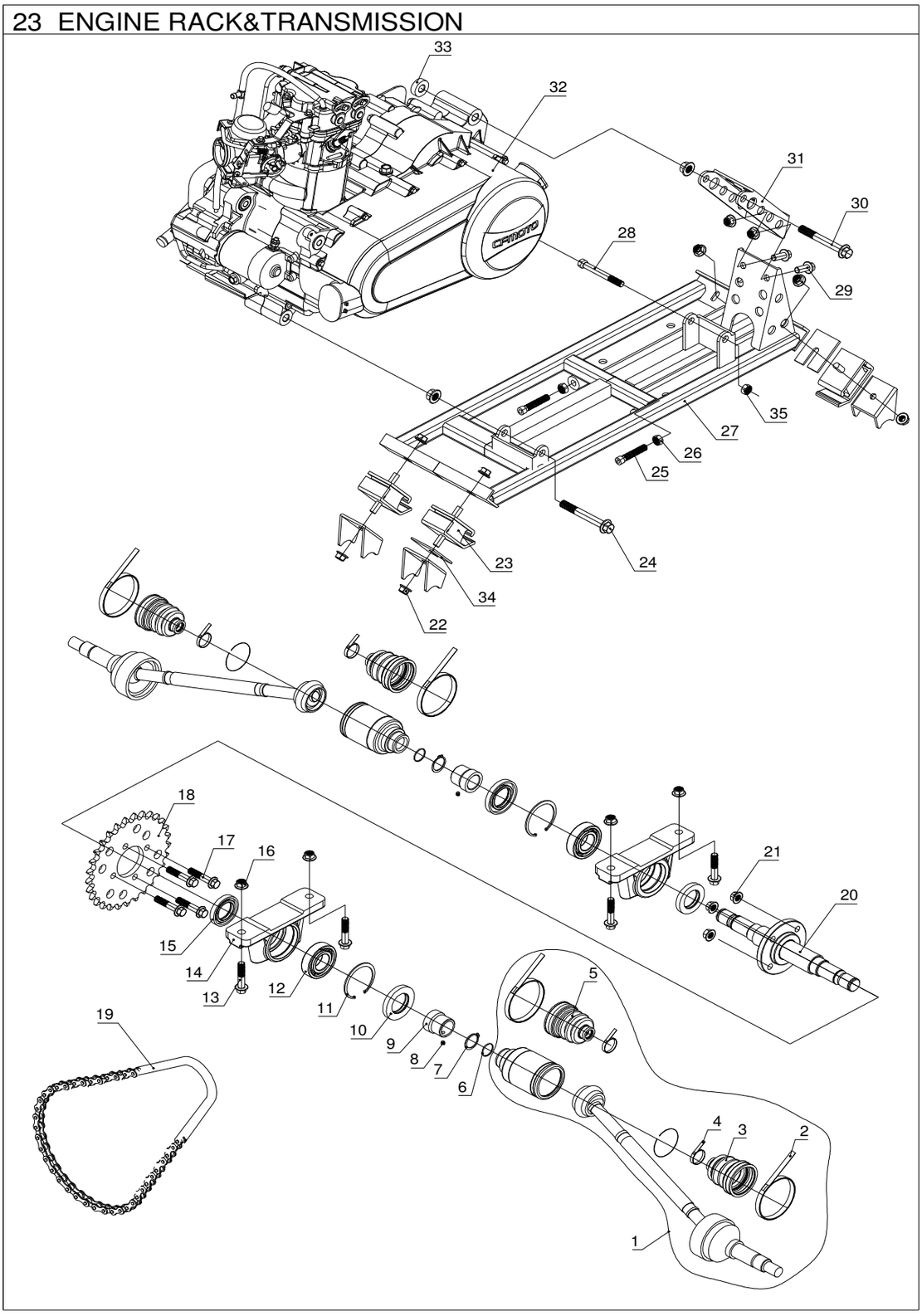

23 ENGINE RACK&TRANSMISSION

No.	PART NO.	DESCRIPTION	Q'TY
1	DN250.07.01.00.00	CV AXLE.ASSY	2
2	DI250.07.01.00.01	BRIDLE.BOOT	4
3	DI250.07.01.00.04	OUTER BOOT	2
4	DI250.07.01.00.03	BRIDLE.BOOT	4
5	DI250.07.01.00.02	INNER BOOT	2
6	2303016	STEEL THREAD CIRCLIP	2
7	894.1-C26	CIRCLIP FOR AXIS 26	2
8	77-M5X6	HOLDING SCREW M5x6	2
9	DN250.07.00.00.03	SPROCKET SHAFT SLEEVE	2
10	9877.1-FB 38X62X8	GEASE SEAL FB 38x62x8	2
11	893.1-C62	CIRCLIP FOR HOLE 62	2
12	281-B1206	BALL BEARING 1206	2
13	5787-M12X1.5X45	FLANGE BOLT M12x1.5x45	4
14	DI250.07.00.00.06	BEARING SEAT（CAST STEEL）	2
15	9877.1-FB 35x55x8	GEASE SEAL FB 35x55x8	2
16	6177.1-M10	FLANGE NUT M12x1.5	2
17	5787-M8x30	FLANGE BOLT M8x30	6
18	DN250.07.00.00.04	CHAIN PULLEY(43 TOOTH)	1
19	DN250.07.03.00.00A	10A CHAIN(66)	1
20	DN250.07.02.00.00	MID AXIS	1
21	6187.1-M8	FLANGE LOCK NUT M8	6
22	6177.1-M10x1.25	FLANGE NUT M10x1.25	6
23	DS250.08.00.00.03	ENGINE BUMPER	4
24	5787-M12X1.5X115	FLANGE BOLT M12x1.5x115	1
25	70-85 M10x100	SOCKET HEAD BOLT M10x100	2
26	6172-M10	THIN NUT M10	2
27	DN250.08.02.00.00A	ENGINE RACK	1
28	5785-86 M12×1.5×80	BOLT M12x1.5x100	1
29	5787-M10X1.25X25	FLANGE BOLT M12x1.5x25	2
30	5787-M12x1.5x115	FLANGE BOLT M12x1.5x115	1
31	DN250.08.01.00.00A	ENGINE STAY.REAR	1
32	DI250.07.04.00.00	ENGINE ASSY	1
33	DI250.08.00.00.01	ENGINE STAY SPACER	1
34	D650.01.02.00.02	ENGINE RACK CUSHION	2
35	6171 M12×1.5	NUT M12×1.5	2
36			
37			
38			
39			
40			
41			
42			
43			
44			
45			
46			

24、ENGINE ASSEMBLY

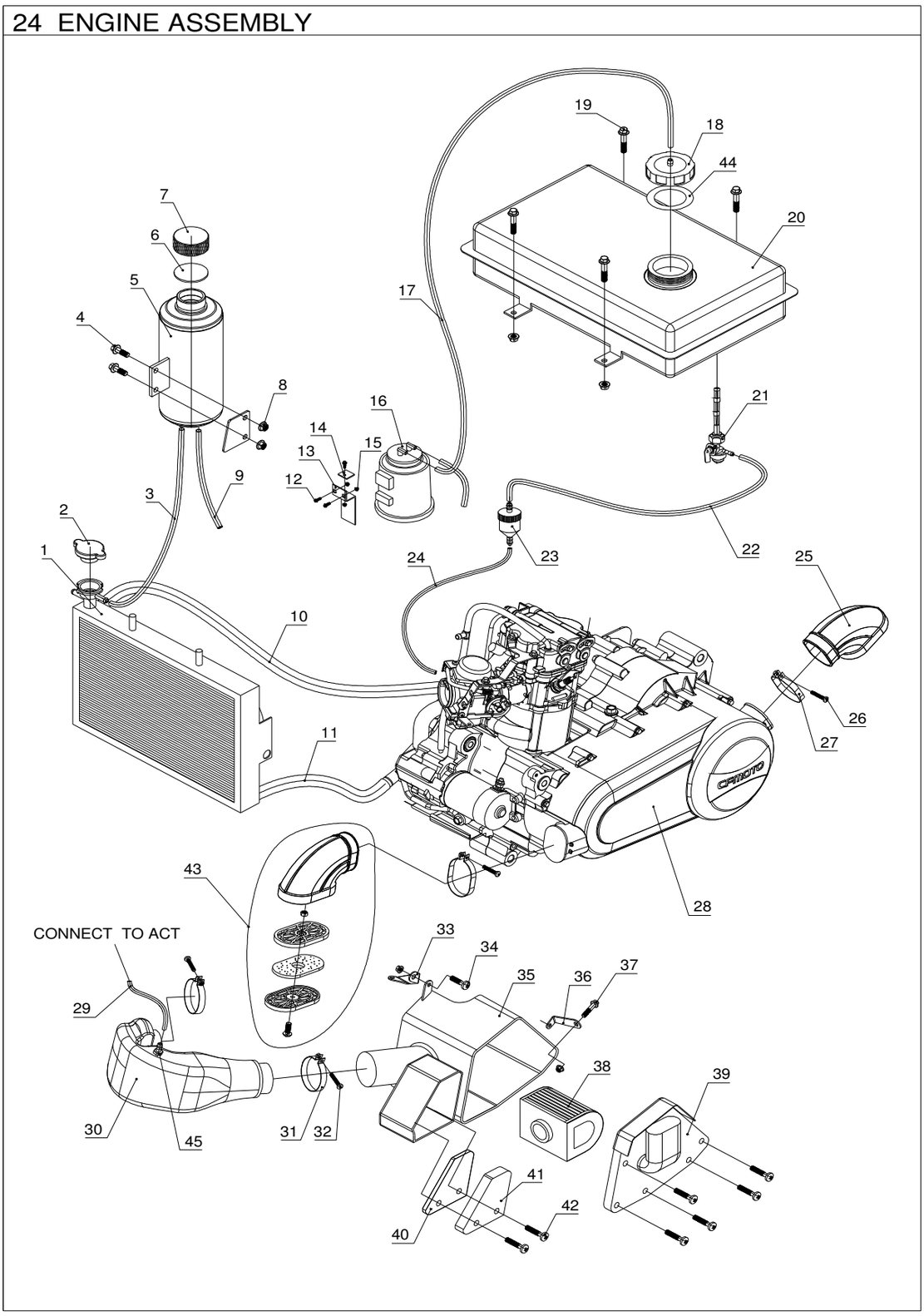

24 ENGINE ASSEMBLY

No.	PART NO.	DESCRIPTION	Q'TY
1	DI250.05.01.01.01	RADIATOR	1
2	DI250.05.01.01.02	RADIATOR VALVE	1
3	DN250.05.01.00.04	SUCTION PIPE	1
4	5787-M8x20	FLANGE BOLT M8X20	2
5	D800.04.02.02.00	WATER TANK.GK800	1
6	D800.04.02.02.02	SEAL CUSHION	1
7	D800.04.02.02.01	WATER TANK CAP	1
8	6187.1-M8	FLANGE LOCK NUT M8	6
9	DN250.05.01.00.05	OVERFLOWING PIPE	1
10	DN250.05.01.00.01	ENGINE OUTLET WATER PIPE	1
11	DN250.05.01.00.02	ENGINE INLET WATER PIPE	1
12	5787-M6x20	FLANGE BOLT M6X20	3
13	D650.04.06.00.01	SUPPORT.ACT	1
14	D650.04.06.00.02	ACT STOP	1
15	6187.1-M6	FLANGE LOCK NUT M6	3
16	D650.04.06.01.00	ACT	1
17	DN250.05.04.00.04	INLET PIPE.ACC	1
18	JD1135000	FUEL TANK CAP	1
19	5787-M8x25	FLANGE BOLT M8X25	4
20	D250.11.804	FUEL TANK	1
21	JD1138000	FUEL SWITCH	1
22	DN250.05.02.00.02	GAS PIPE1	1
23	DS250.11.01.00.09	GAS FILTER	1
24	DN250.05.02.00.03	GAS PIPE2	1
25	DN250.11.01.07.00	OUTLET CVT AIR FILTER	1
26	818-M5X30	CROSS PANHEAD SCREW M5X30	2
27	DN250.11.01.13.00	CVT WRAP HOOP	2
28	DI250.07.04.00.00	ENGINE ASSY	2
29	DN250.05.04.00.06	OUTLET PIPE.ACC	1
30	DS250.11.01.00.20	AIR BOX	1
31	DN250.05.03.01.06	AIR FILTER WRAP HOOP	2
32	818-85 M5X30	CROSS PANHEAD SCREW M5X30	2
33	DN250.05.03.00.01	AIR FILTER SUPPORT EAR1	1
34	818- M6x20	CROSS PANHEAD SCREW M6X20	1
35	DN250.05.03.01.00	AIR FILTER SHELL	1
36	DI250.05.03.00.02	AIR FILTER SUPPORT EAR2	1
37	5787-M8x20	FLANGE BOLT M8X20	1
38	DN250.05.03.01.03	AIR FILTER CORE	1
39	DN250.05.03.01.02	AIR FILTER COVER BOX	1
40	DN250.05.03.01.05	AIR&OIL SEPARATOR FILTER SPONGE	1
41	DN250.05.03.01.04	AIR&OIL SEPARATOR COVER	1
42	818-M5X30	CROSS PANHEAD SCREW M5X30	7
43	DN250.11.01.06.00	CVT INLET AIR FILTER	1
44	JD1135001	RUBBER SEAL WASHER	1
45	REV-22A	AIR INTLET	1
46			

25、EXHAUST,SHIFT& BRAKE

25 EXHAUST&SHIFT&PARKING BRAKE

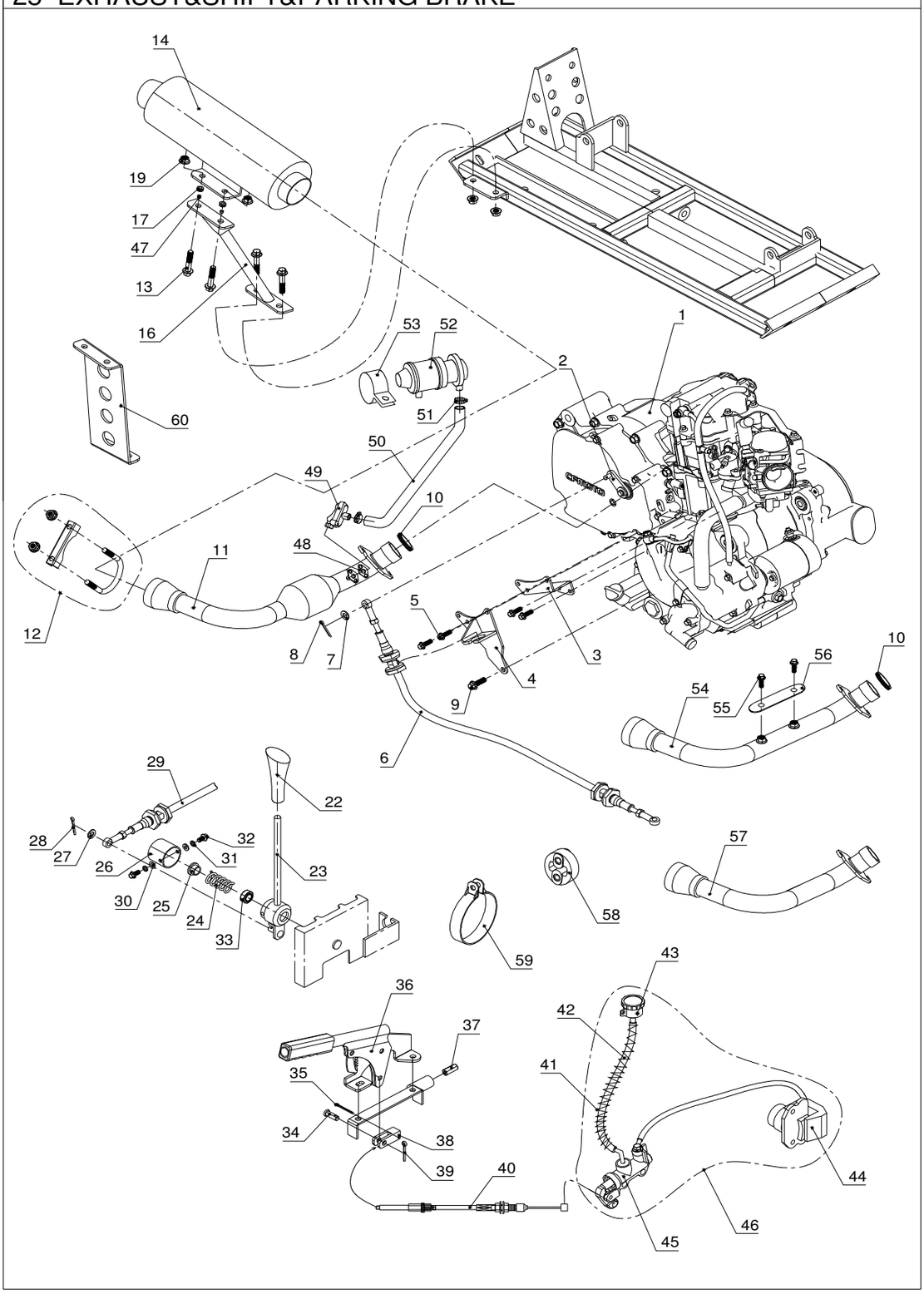

25 EXHAUST&SHIFT&PARKING BRAKE			
No.	PART NO.	DESCRIPTION	Q'TY
1	DI250.07.04.00.00	ENGINE ASSEMBLY	1
2	DI250.05.03.05.00	GEAR SHIFT ARM	1
3	DI250.05.03.00.05A	FIXED MOUNT OF SHIFT CABLE 3.1	1
4	DI250.05.03.00.03A	FIXED MOUNT OF SHIFT CABLE 1.1	1
5	5787-M6x10	HEXAGON-HEADED FLANGE BOLT M6X10	2
6	DN250.05.03.04.00	SHIFT CABLE	1
7	95-PW 8	PLAIN WASHER 8	1
8	91-CP2x25	COTTER PIN 2X25	1
9	5787-M8x20	HEXAGON-HEADED FLANGE BOLT M8X20	1
10	JD1110008	ASBESTOS MUFFLER GASKET	1
11	DN250.05.04.00.01E	MUFFLER ELBOW PIPE	1
12	DI250.05.04.00.02	INTAKE MUFFLER CLAMP	1
13	5787- M8X25	FLANGE BOLT M8X25	2
14	DN250.05.04.00.02B	SHORTER MUFFLER 250	1
15	5787- M8x30	HEXAGON-HEADED FLANGE BOLT M8X30	2
16	DN250.05.02.00.03A	MUFFLER MOUNT	1
17	JD1910002A	RUBBER MUFFLER BUSHING	2
18	DN250.01.02.00.05	RIGHT TAIL SIDE BOARD	1
19	6177.1-M8	SELF-LOCKING HEXAGON-HEADED FLANGE NUT M8	4
22	JD10.82.101	SHIFT RUBBER BUSHING	1
23	DI250.05.03.03.00	SHIFT LEVER	1
24	D250.08.004	SHIFT SPRING	1
25	D250.08.005	STOP RING	1
26	D250.08.009	SHIFT LEVER COVER	1
27	95-PW 8	PLAIN WASHER 8	1
28	91-CP 3x30	COTTER PIN 3x30	1
29	DN250.05.03.04.00	SHIFT CABLE	1
30	95-PW 6	PLAIN WASHER 6	2
31	93-SW 6	SPRING WASHER 6	2
32	5787- M6X10	FLANGE BOLT M6X10	2
33	GE12C	JOINT BEARING GE12C	1
34	882- P8x24	B PIN 8x24	1
35	91-CP3x30	COTTER PIN 3X30	1
36	D650.07.02.01.00	PARKING MACHANISM	1
37	D650.07.02.00.04	PARKING STEEL BUSHING	1
38	D650.07.02.00.01	PARKING BRAKE JOINT	1
39	91-CP3x30	COTTER PIN 3x30	1
40	D650.07.02.02.00	PARKING BRAKE CABLE	1
41	DI250.04.03.00.03	GUARD SPRING	1
42	DN250.04.03.00.02	PARKING BRAKE OIL TUBE	1
43	DI250.04.03.00.01	PARKING BRAKE OIL CUP	1
44	DN250.04.01.00.02	BRAKE CALIPER 2	1

25、EXHAUST,SHIFT& BRAKE

25 EXHAUST&SHIFT&PARKING BRAKE

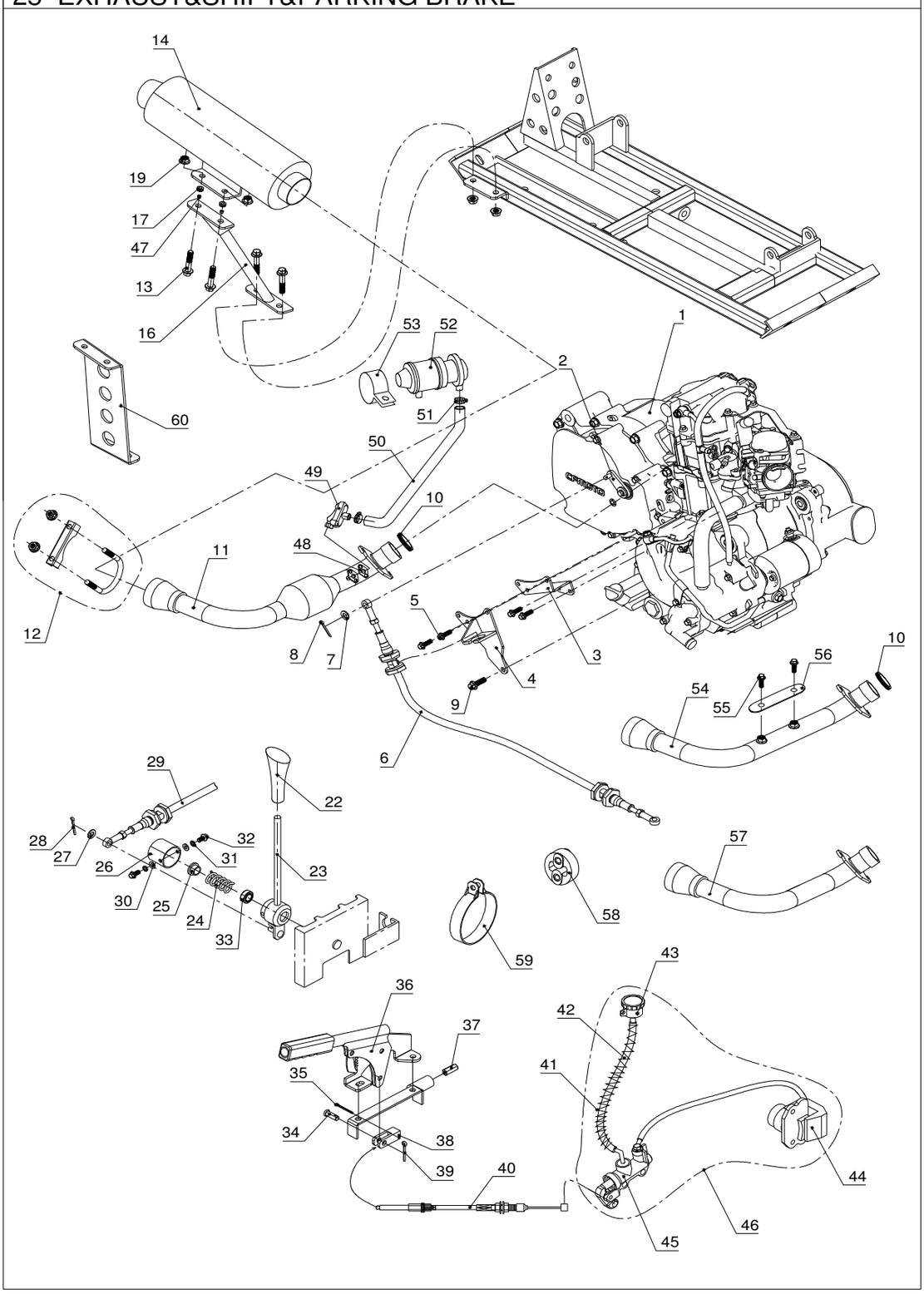

25 EXHAUST&SHIFT&PARKING BRAKE

No.	PART NO.	DESCRIPTION	Q'TY
45	DN250.04.03.01.00	PARKING BRAKE MAIN PISTON	1
46	DN250.04.03.00.00	PARKING BRAKE ASSY	1
47	JD1910002	RADIATOR SLEEVE	2
48	D650.04.04.00.05	GRAPHITE WASHER	1
49	E650.04.04.05.00	ONE-WAY VALVE	1
50	E650.04.04.00.13	AIR-INLET PIPE	1
51	E650.04.04.00.12	CLAMP	1
52	E650.04.04.04.00	AIR FILTER	1
53	E650.04.04.00.10	AIR FILTER SUPPORT	1
54	DN250.05.04.00.01	MUFFLER ELBOW PIPE	1
55	5787- M6	FLANGE NUT M6	2
56	S650.04.04.03.01	HEAT SHIELD	1
57	DN250.05.04.00.01A	MUFFLER ELBOW PIPE	1
58	DI250.05.02.00.04	MUFFLER RUBBER BUMPER	1
59	DI250.05.04.00.03	MUFFLER BRACKET	1
60	DN250.05.02.00.03	MUFFLER MOUNT	1

26、REAR SUSPENSION

26 REAR SUSPENSION

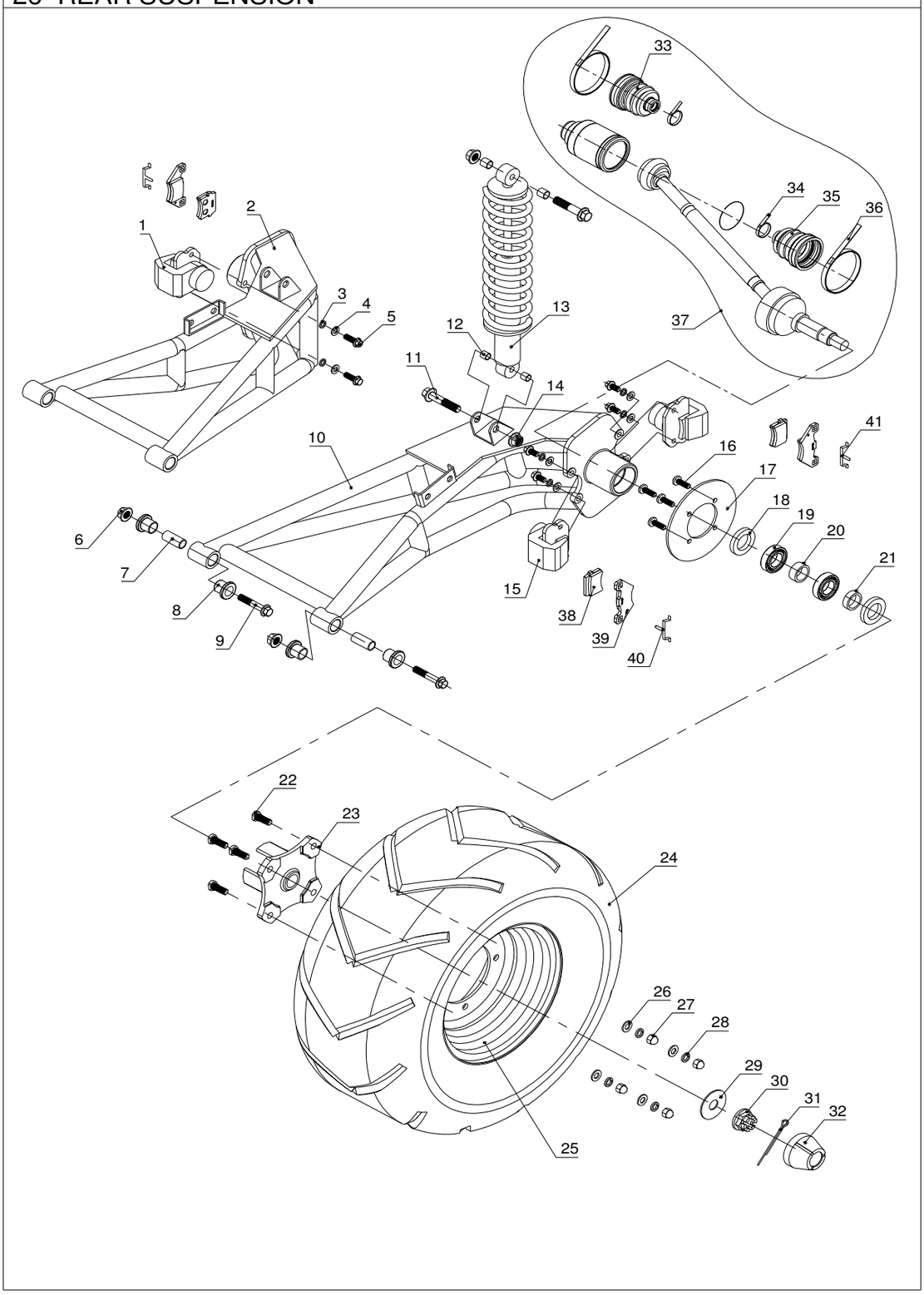

26 REAR SUSPENSIONG

No.	PART NO.	DESCRIPTION	Q'TY
1	DN250.04.01.00.02	BRAKE CALIPER 2	2
2	DN250.09.02.00.00	RIGHT TRAILING ARM	1
3	93-SW 8	SPRING WASHER 8	4
4	95-PW 8	PLAIN WASHER 8	4
5	5787- M8X15	FLANGE BOLT M8X15	4
6	6177.1- M10X1.25	FLANGE NUT M10X1.25	4
7	D650.02.01.00.02	TRAILING ARM STEEL BUSHING	4
8	D650.02.01.00.01	TRAILING ARM RUBBER BUSHING	8
9	5787- M10X1.25X70	FLANGE BOLT M10X1.25X70	4
10	DN250.09.01.00.00	LEFT TRAILING ARM	1
11	5787- M12X1.5X45	FLANGE BOLT M12X1.5X45	4
12	DN250.09.00.00.07	SHOCK ABSORBER SPACER	8
13	DN250.09.03.00.00	SHOCK ABSORBER	2
14	6177.1-M12X1.5	FLANGE NUT M12X1.5	4
15	DN250.04.01.00.01	BRAKE CALIPER 1	1
16	2673- M8X20	INNER HEXAGON SUNK SCREW M8X20	4
17	DI250.04.01.00.04A	REAR BRAKE DISC	2
18	9877.1-FB32X47X8	GREASE SEAL FB 32X47X8	4
19	276-B 6005	BALL BEARING 6005	4
20	DI250.09.00.00.01	REAR WHEEL SPACER 1	2
21	DI250.09.00.00.06	REAR WHEEL SPACER 2	2
22	DI250.02.00.00.02	KNURLED BOLT	8
23	DI250.09.00.00.05	BRAKE DISC HUB	2
24	DN250.09.01.00.01	REAR TIRE 22X10-10	2
25	D250.00.037	REAR RIM	2
26	95-PW10	PLAIN WASHER 10	8
27	923-M10x1.25	CAPPED NUT M10X1.25	8
28	95-SW 10	SPRING WAHSER 10	8
29	D250.06.011	REAR WHEEL AXLE WASHER	2
30	DI250.07.04.00.01	HALF AXLE SLOTTED NUT	2
31	91-CP4X30	COTTER PIN 4X30	2
32	JD0360010	FRONT WHEEL HUB COVER	2
33	DI250.07.01.00.02	INNER BOOT	2
34	DI250.07.01.00.03	SMALL BRIDLE.BOOT	4
35	DI250.07.01.00.04	OUTER BOOT	2
36	DI250.07.01.00.01	BIG BRIDLE.BOOT	4
37	DN250.07.01.00.00	CV AXLE.ASSY	2
38	DN250.04.01.00.03	FRACTION PLATE 1	2
39	DN250.04.01.00.04	FRACTION PLATE 2	2
40	DN250.04.01.00.06	BRAKE CLIPPER SPRING PLATE 2	1
41	DN250.04.01.00.05	BRAKE CLIPPER SPRING PLATE 1	2

27、ELECTRICAL PARTS

27 ELECTRICAL PARTS

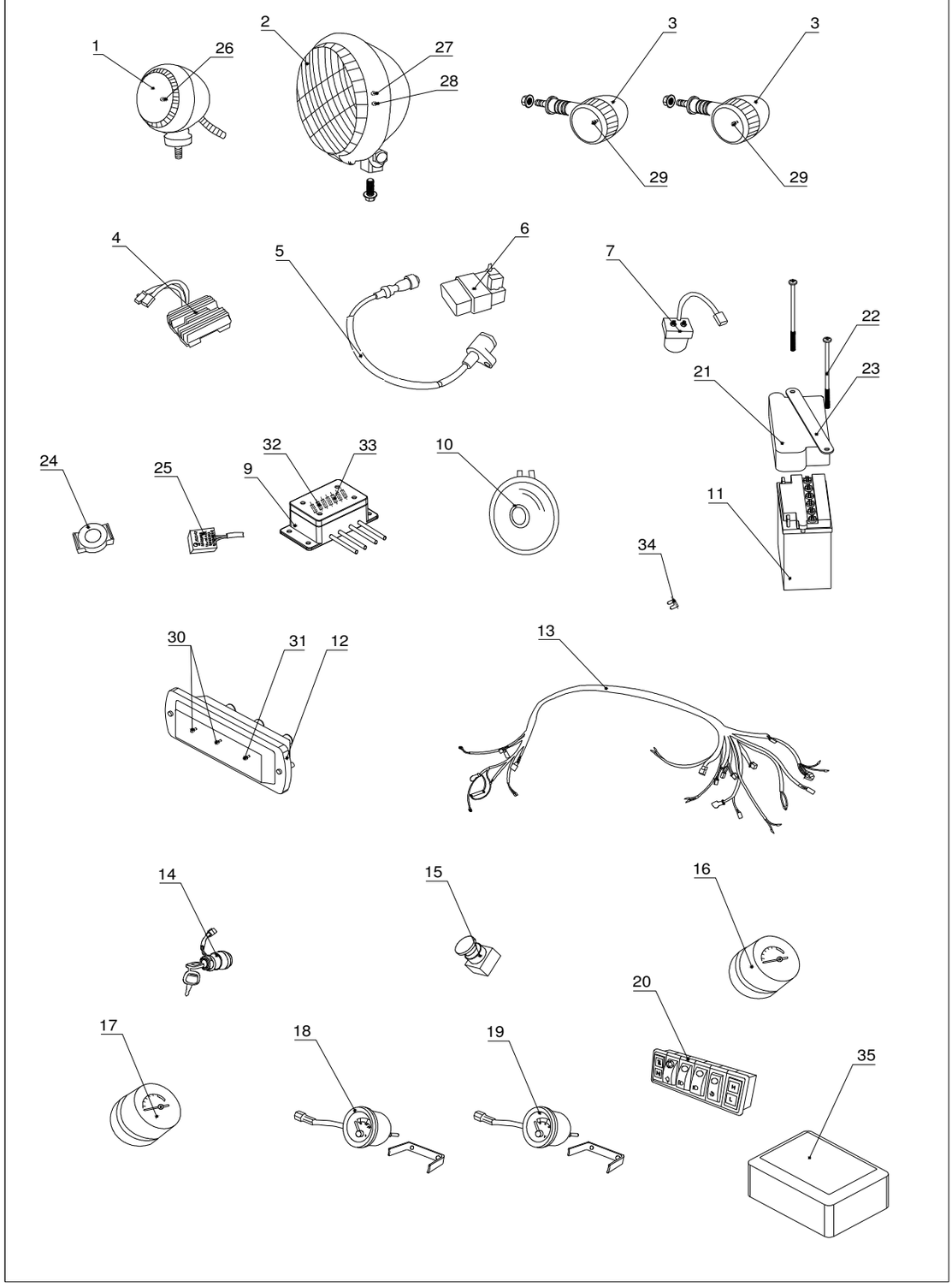

27 ELECTRICAL PARTS

No.	PART NO.	DESCRIPTION	Q'TY
1	D650.00.12.00	SPOT LIGHT	3
2	D650.06.00.03.00	HEAD LIGHT	2
3	DI250.10.04.00.00	TURNING SIGNLE	2
4	D250.07.915	VOLTAGE REGULATOR	1
5	DI250.10.05.00.00	IGNITION COIL	1
6	D250.07.917	CDI	1
7	D250.07.912	STARTER RELAY	1
9	DI250.10.04.00.00	FUSE BOX	1
10	D250.07.913	HORN	1
11	D250.07.802	BATTERY	1
12	D800.06.00.00.12	TAILLIGHT ASSEMBLY	2
13	DN250.10.01.01.00	HARNESS	1
14	D250..07.909	IGNITION SWITCH	1
15	DS250.10.00.00.05	HORN BUTTON	1
16	DN250.10.02.00.00	SPEED METER.250	1
17	DN250.10.03.00.00	TACHO METER.250	1
18	N650.06.02.07.00	WATER TEMPERATURE INDICATOR.N650	1
19	D1600.06.05.00.00	VOLTAGE METER.D1600	1
20	DN250.10.06.00.00	PANEL SWITCH.DN250	1
21	DN250.10.01.00.00	BATTERY RUBBER COVER	1
22	5785- M16X110	BOLT M6X110	2
23	DN250.10.00.00.01	BATTERY STOP BAND	1
24	D250.07.924	FLASHER COAT	1
25	D250.07.914A	FLASHER APPARATUS	1
26	D650.06.00.12.01	SPOT LIGHT BULB	3
27	D650.06.00.03.01	HENDLIGHT BULB 1	1
28	D650.06.00.03.01	HENDLIGHT BULB 2	1
29	D650.06.00.05.01	FRONT TURNING-SIGNLE BULB	2
30	D650.06.00.04.02	TAILLIGHT BULB	4
31	D650.06.00.04.03	BRAKE LIGHT BULB	2
32	E650.06.00.01.06	FUSE 5A	3
33	E650.06.00.01.08	FUSE 10A	4
34	E650.06.00.01.10	FUSE 20A	1
35	D250.04.901A	ELECTRIC COVER	1

28、OTHER PARTS

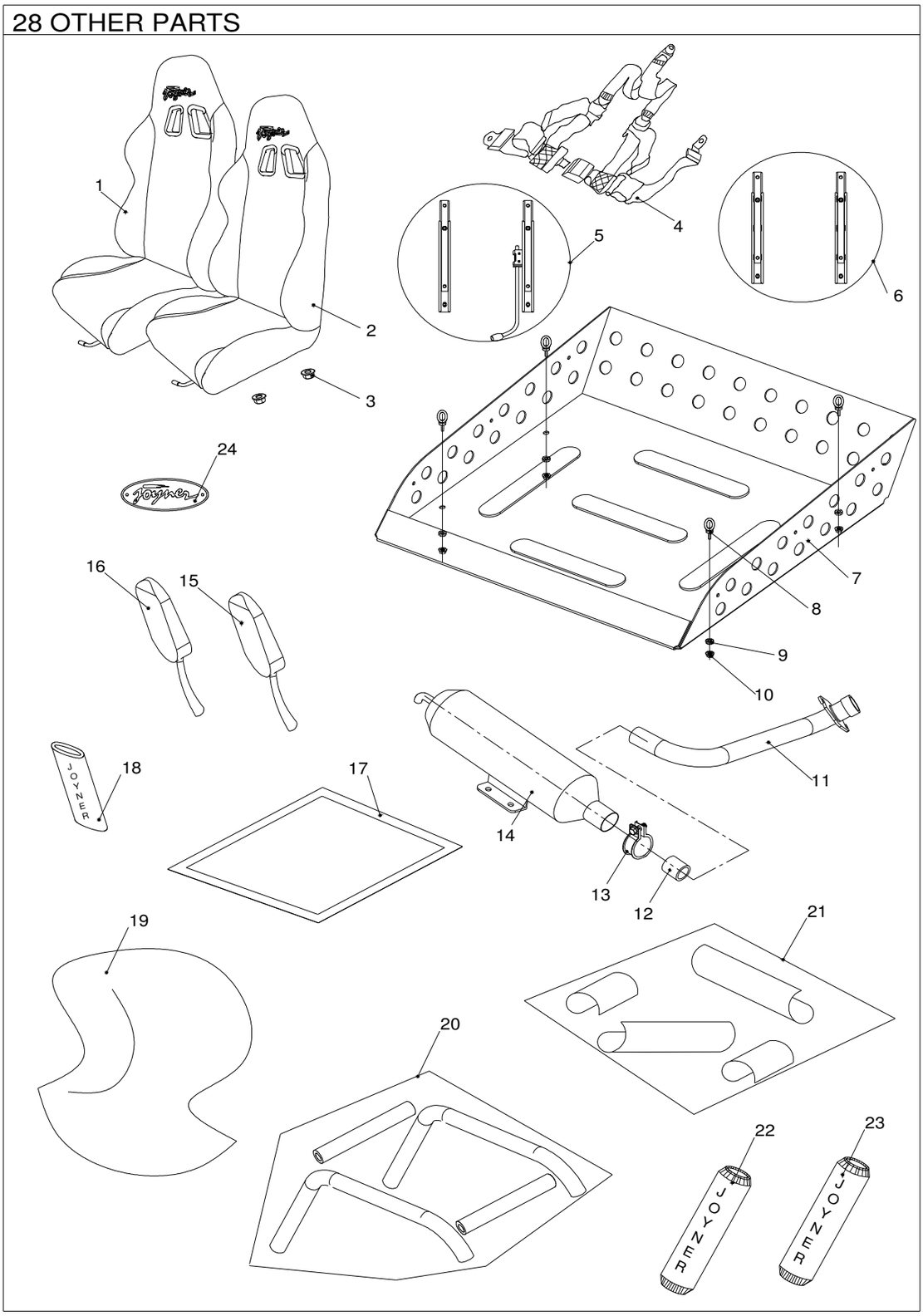

28 OTHER PARTS

No.	PART NO.	DESCRIPTION	Q'TY
1	DN250.11.01.15.00	RIGHT SEAT COMP	1
2	DN250.11.01.14.00	LEFT SEAT COMP	1
3	6177.1- M10X1.25	FLANGE NUT M10X1.25	8
4	D250.11.005A	SAFTY BELT	2
5	DI250.11.01.00.07	RIGHT SEAT ADJUSTER	1
6	DI250.11.01.00.06	LEFT SEAT ADJUSTER	1
7	DN250.01.02.00.07	ROOF RACK	1
8	D1600.08.01.00.06	LOOP M10x1.25	4
9	D1600.01.02.00.07	SPACER	1
10	6177.1-M10x1.25	FLANGE NUT M10x1.25	4
11	DN250.05.04.00.01B	EXHAUST PIPE FOR AU	1
12	JD1118009	SEAL SLEEVE	1
13	JD118006	SMALL CLAMP	1
14	DN250.05.04.00.02B	MUFFLER	1
15	JN0400020EU	LEFT BACK VIEW MIRROR	1
16	JN0400030EU	RIGHT BACK VIEW MIRROR	1
17	DN250.11.01.09.00	CANVAS ROOF	1
18	D650.08.01.00.13	SAFTY BELT TUBE	4
19	D800.08.01.00.03	CLOTH COVER FOR ENTIRE KART	1
20	D250.11.770B	FOAM COVER	1
21	DN250.11.01.12.00	ENVELOPMENT	1
22	DN250.11.01.11.01	FRONT SHOCK ABSORBER COAT	2
23	DN250.11.01.11.02	REAR SHOCK ABSORBER COAT	2
24	DN250.11.01.00.01	"JOYNER" PLATE	1

28 OTHER PARTS

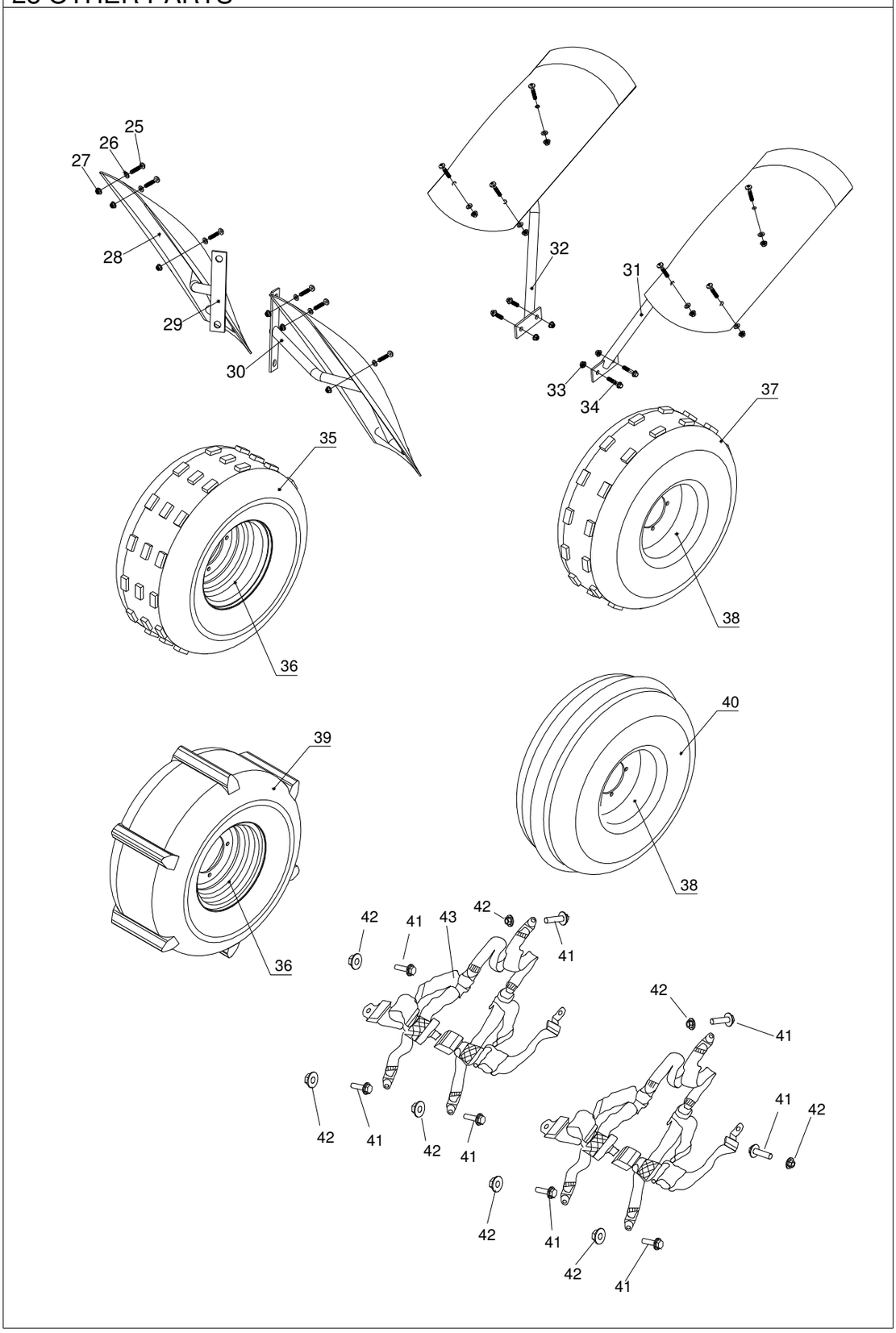

28 OTHER PARTS			
No.	PART NO.	DESCRIPTION	Q'TY
25	444.6.20	PHILIPS HEAD SCREW M6X20	12
26	D250.11.058	RUBBER WASHER 6	12
27	6177.1- M6	LOCK FLANGE NUT M6	12
28	D250.11.005A	MUD GUARD	4
29	DN250.11.01.00.03	FR R MUD GUARD SUPPORT	1
30	DN250.11.01.00.04	FR L MUD GUARD SUPPORT	1
31	DN250.11.01.00.05	RL MUD GUARD SUPPORT	1
32	DN250.11.01.00.06	RR MUD GUARD SUPPORT	1
33	6177.1- M8	FLANGE NUT M8	4
34	5787-M8X20	FLANGE BOLT M8X20	4
35	DN250.09.01.00.02B	REAR TIRE 22X10-10	2
36	D250.00.037	REAR RIM 10X8	2
37	DN250.02.08.00.01B	FRONT TIRE 21X8-10	2
38	JD0760800	FRONT RIM 10X5.5	2
39	DN250.09.01.00.02A	REAR DESERTR TIRE 22X10-10	2
40	DN250.02.08.00.01A	FRONT DESERT TIRE 21X8-10	2
41	5787-M12*1.5*25	bolt-washer M12*1.5*25	10
42	6177.1-M12*1.5	nut-washer M12*1.5	10
43	SV1100.08.01.18.00	safty belt	1

PREPARATION ATTACH INSTRUCTION

ATTACH BATTERY

STEP 1: FILL THE ELECTROLYTE AS BELOW

a) Pull the seal cap out of the plastic bottle

b) Turn over the seal cap 180 degree, fix it on the outlet of plastic bottle

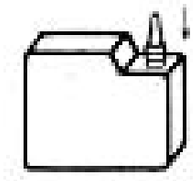

a) Cut the inlet of plastic bottle

b) Fill the battery with electrolyte to upper lever by inserting every inlet of the battery

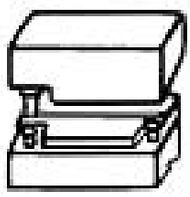

STEP 2: Put the battery into the box on Off highway recreational vehicle.
STEP 3: Connect the wire to battery; red to “+”, black to “-”.
STEP 4: Fix the RUBBER COVE, STOP BAND and tighten both bolts and nuts.

Notice:

Before use new battery, it needs to notice follows:

1- After the battery is filled electrolyte, the new battery need to recharge as the Owner’s manual said. Otherwise, the new battery will be damaged and can’t recharge.
2- The new battery can’t overload in use, otherwise it damage forever.
3- The new battery need to maintenance with recharge as the Owner’s manual said.

ATTACH PROTECTIVE BARS

2

M12x1.75 Torque: 70±5 N.M

M10x1.5 Torque: 40±5 N.M

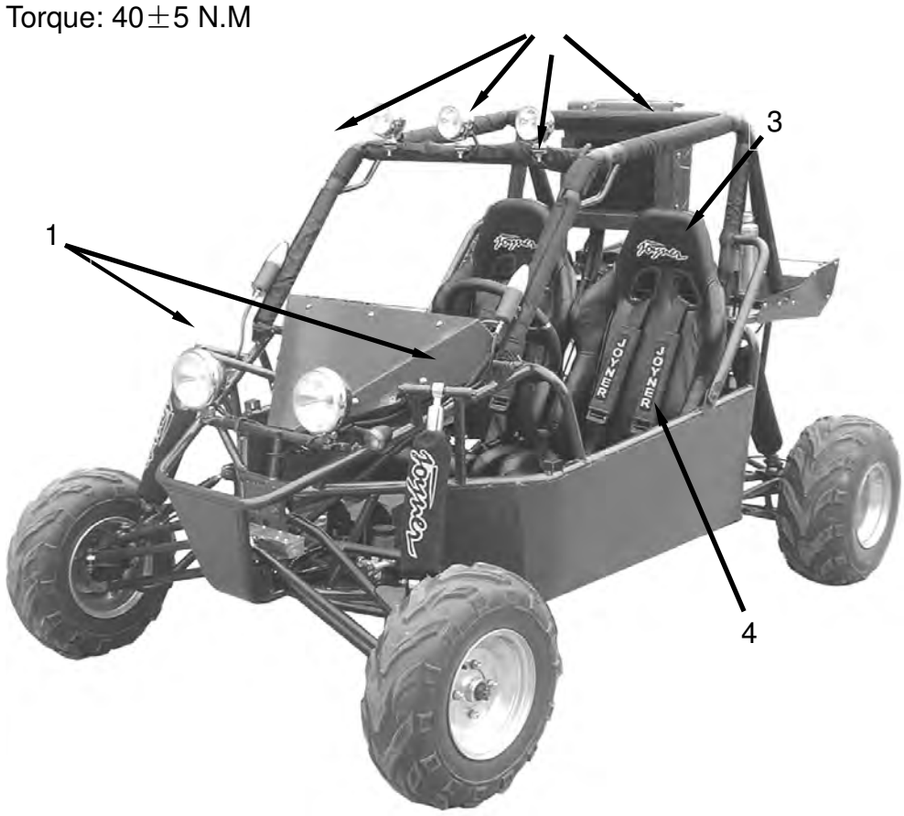

1、

2、

3、

4、

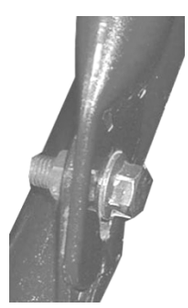

ATTACH REAR SHOCK

a) Remove the bolt and the nut
b) Attach the rear shock as below picture:
Torque: 70±5 N.M

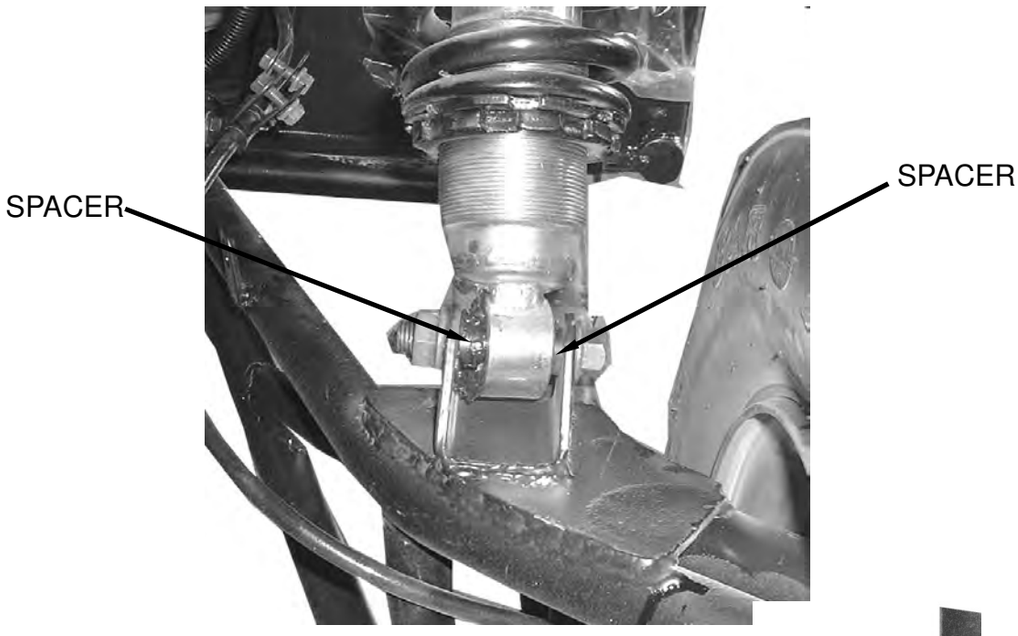

ATTACH TRAILING ARM

Torque: 40±5 N.M

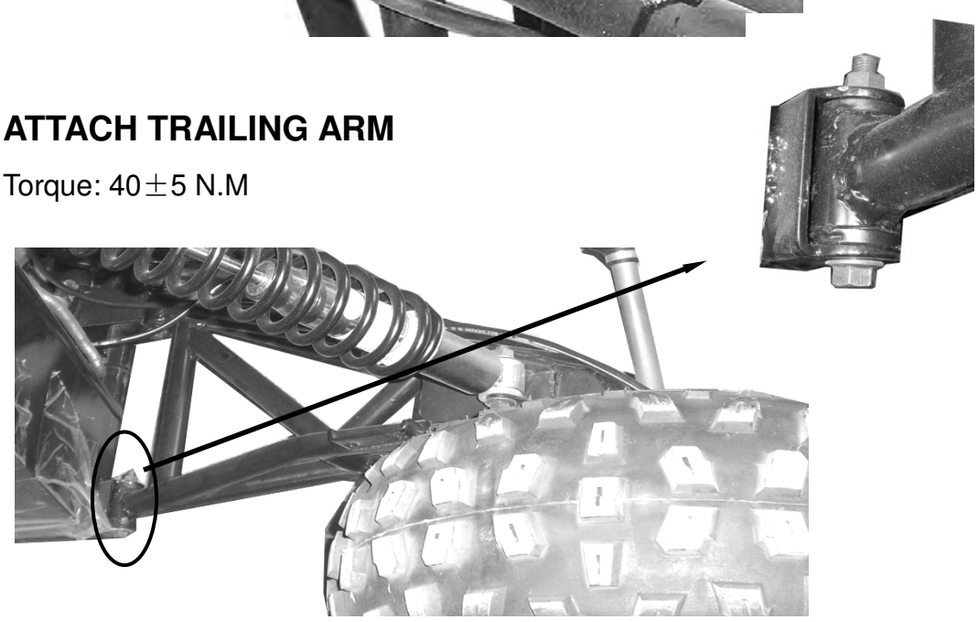

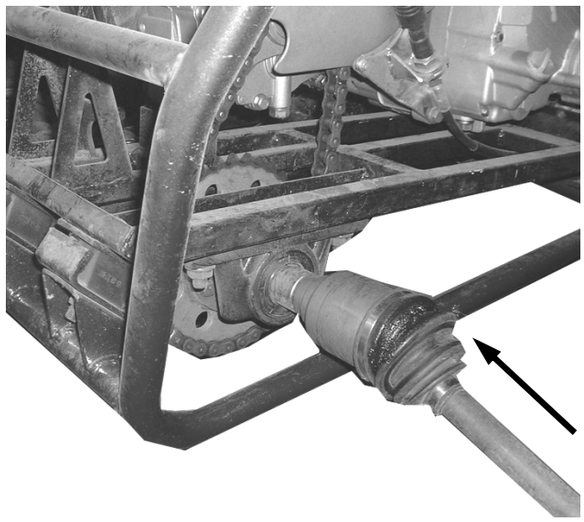

ATTACH FRONT SHOCK

Torque: 70±5 N.M

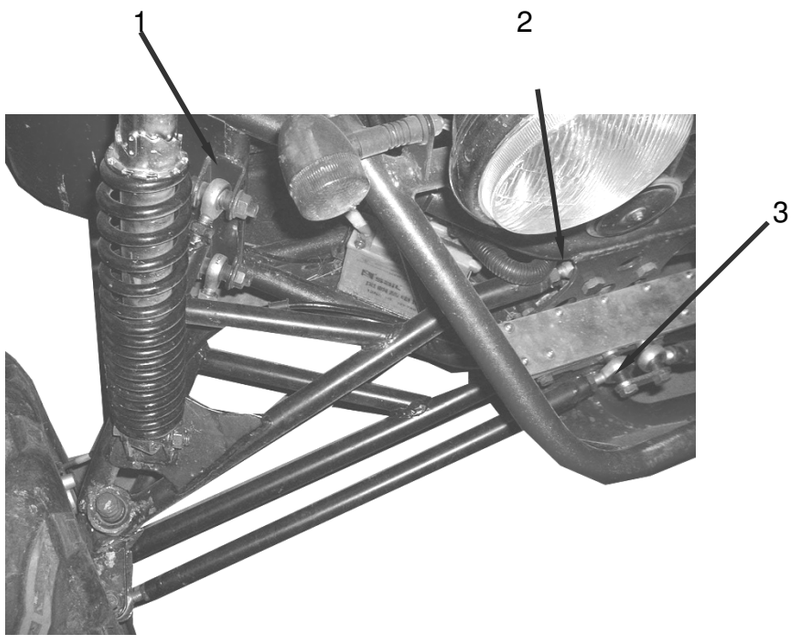

1.

2.

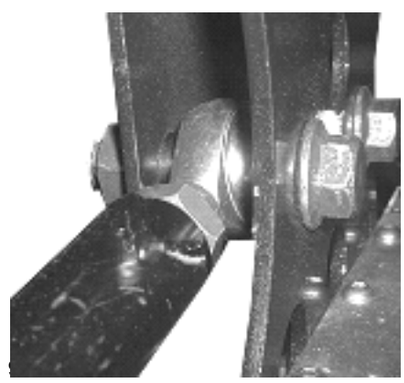

3.

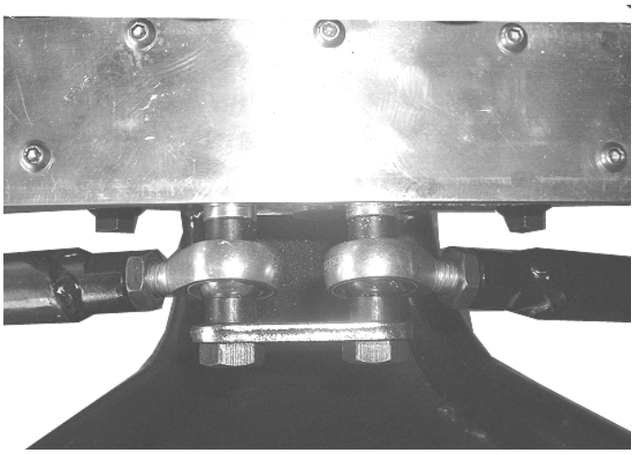

ATTACH FRONT TIRE

The hub to fix the front tire is packed as below:

1- Remove four nuts, four spring washers, and four plain washers on the hub.
2- Fix the rim on the hub.

3- Insert the washers, spring washers through bolt on the hub. Tighten four nuts. Torque:70±5 N.M

Notice:
Direction marked on the tire must correspond to the vehicle forward

ATTACH SEAT AND SAFT BELT

Torque: 70±5 N.M

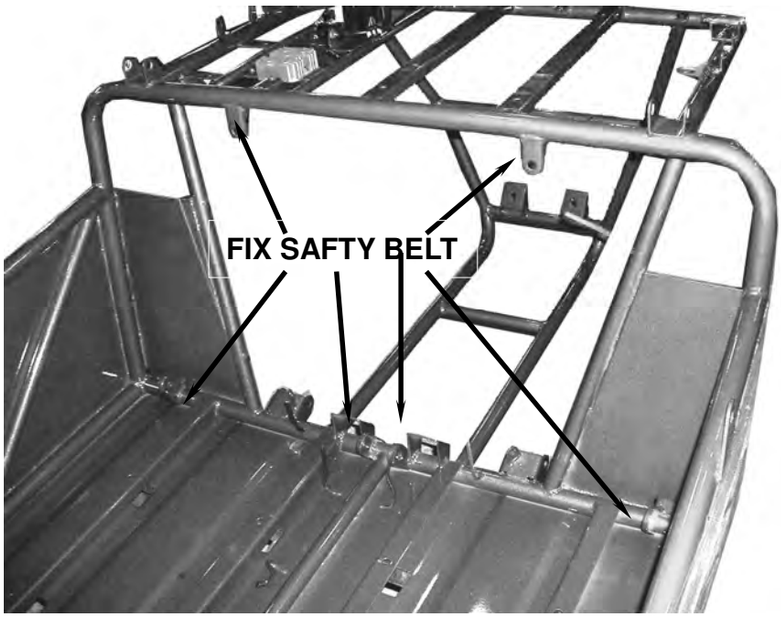

ATTACH THE RADIATOR

1- Attach the radiator as below pictures.
2- Connect wire from fan motor to main wire.
3- Arrange the main and reserve coolant rubber tube as below picture.

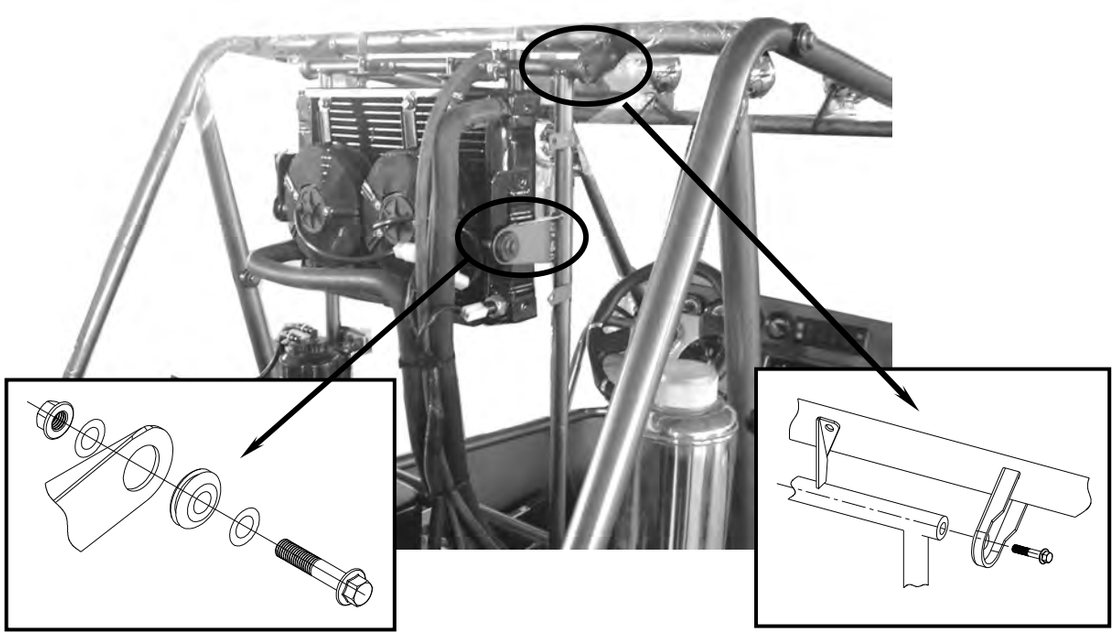

ATTACH SILENCER
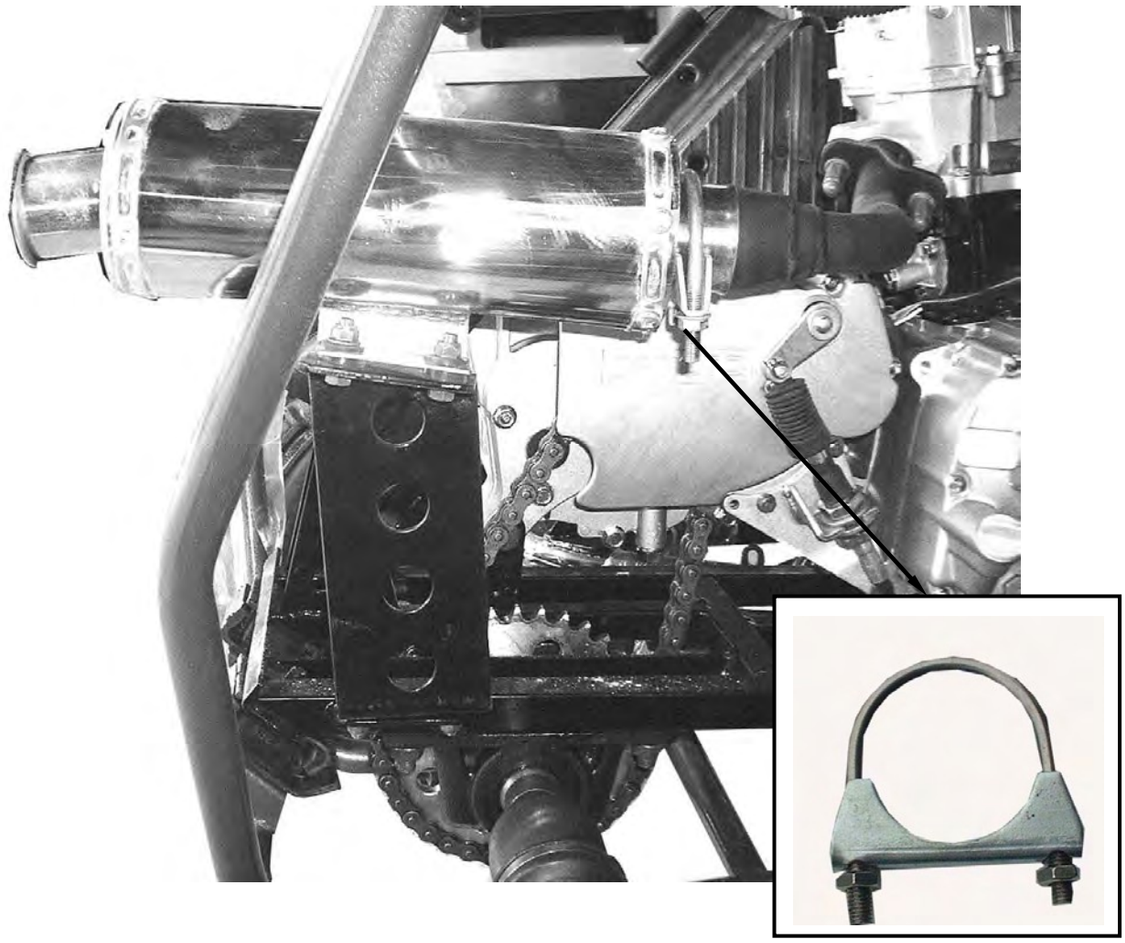
Attach the SILENCER as below pictures.